September 2015
Volume 121
Issue 1953
£5.20

www.electronicsworld.co.uk

Electronics WORLD

THE ESSENTIAL ELECTRONICS ENGINEERING MAGAZINE

Keysight FieldFox

Industry's first 50 GHz handheld analyzer



SPECIAL REPORT ON LOW POWER DESIGN:

- Filters
- NOCs
- SOCs



Technology
IC developed to very accurately measure Earth's magnetosphere



Analog Design
Past and future, according to Bob Dobkin, Linear Technology's co-founder



Products
Latest components, systems and equipment

SINGLE CCII-BASED FIRST-ORDER CURRENT-MODE ALL-PASS FILTER

FIRAT YUCEL OF AKDENIZ UNIVERSITY AND **ERKAN YUCE** OF PAMUKKALE UNIVERSITY, BOTH IN TURKEY,
PRESENT A CURRENT-MODE FIRST-ORDER ALL-PASS FILTER CONSISTING OF ONLY TWO GROUNDED RESISTORS AND A FLOATING CAPACITOR, WHICH DISSIPATES VERY LOW POWER

All-pass filters (APFs) are widely used in modern communications and instrumentation systems to change the phase of electrical signals whilst keeping their amplitudes constant at all frequencies. APFs were previously built with operational amplifiers (op-amps), but these have some drawbacks, such as slew-rate limitations. Second-generation current conveyors (CCIIs) as current-mode (CM) active devices were then used in building APFs because CM active elements offer advantages such as wider bandwidth, greater linearity and larger dynamic range over op-amps.

A CM first-order APF employing only two grounded resistors, a floating capacitor and a minus-type CCII (CCII-) is discussed in this article.

Circuit Description

The block diagram of the CCII- device with three terminals is shown in Figure 1. It can also be represented by the following matrix equation:

$$\begin{bmatrix} V_X \\ I_Y \\ I_Z \end{bmatrix} = \begin{bmatrix} \beta & 0 \\ 0 & 0 \\ 0 & -\alpha \end{bmatrix} \begin{bmatrix} V_Y \\ I_X \end{bmatrix} \quad (1)$$

where α and β are the frequency-dependent non-ideal current and voltage gains respectively, and both ideally equal one. At sufficiently low frequencies, α and β can also be $\alpha = 1 - \varepsilon_\alpha$ ($|\varepsilon_\alpha| << 1$) and $\beta = 1 - \varepsilon_\beta$ ($|\varepsilon_\beta| << 1$) in which ε_α and ε_β are the current- and voltage-tracking errors and are ideally zero.

The internal structure of the CCII- shown in Figure 2, built by E. Bruun, is used in simulations of the proposed APF. It is assumed that all the MOS transistors are operated in their saturation regions. Bulks of all the MOS transistors are connected to the relevant sources to prevent any body effects.

The Proposed First-Order APF

Figure 3 shows the suggested CM first-order APF, which consists of only one CCII-, two grounded resistors and a floating capacitor.

The transfer function (TF) of the APF in Figure 3 with $R_1 = R_2 = R$ can ideally be written as:

$$\frac{I_{out}}{I_{in}} = -\frac{1 - sCR}{1 + sCR} \quad (2)$$

Here, the phase response is evaluated as:

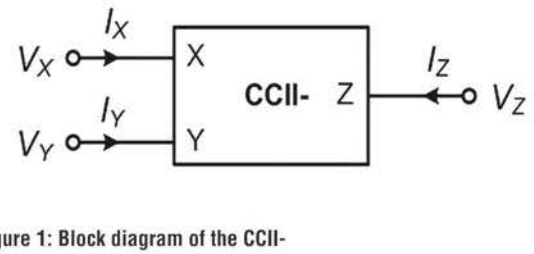

Figure 1: Block diagram of the CCII-

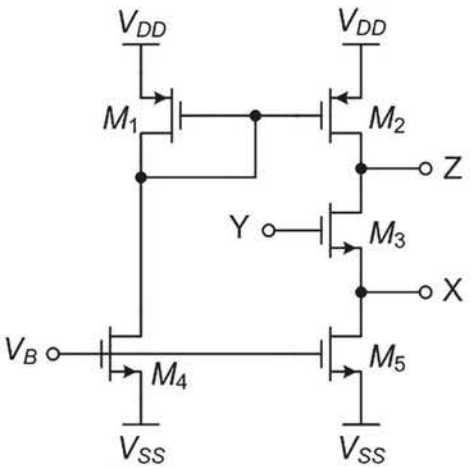

Figure 2: The internal structure of the CCII-

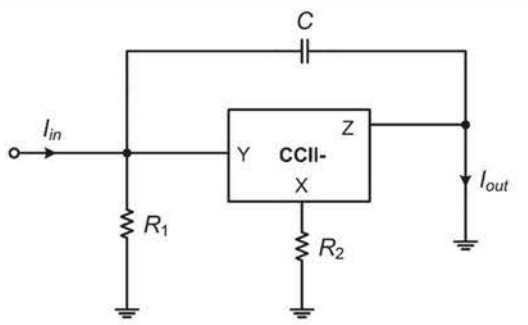

Figure 3: Proposed first-order CM APF circuit

$$\varphi(\omega) = \pi - 2\tan^{-1}(\omega CR) \quad (3)$$

where the phase changes from 180° to 0° as the frequency varies from zero to infinity. In Figure 3, if an RC-CR transformation is achieved, the CM APF employing s single floating resistor and two grounded capacitors has the following TF:

$$\frac{I_{out}}{I_{in}} = \frac{1 - sCR}{1 + sCR} \quad (4)$$

In Equation 4, the phase response is determined as:

$$\varphi(\omega) = -2\tan^{-1}(\omega CR) \quad (5)$$

where the phase changes from 0° to -180° as the frequency varies from zero to infinity.

A straightforward analysis of the APF in Figure 3 with non-ideal gains gives the following TF:

$$\frac{I_{out}}{I_{in}} = -\frac{\alpha\beta\frac{R_1}{R_2} - sCR_1}{1 + sCR_1} \quad (6)$$

Here, the phase response of the APF can also be obtained as:

$$\varphi(\omega) = \pi - \tan^{-1}\frac{\omega CR_2}{\alpha\beta} - \tan^{-1}\omega CR_1 \quad (7)$$

Results

Simulations of the proposed APF were undertaken using the SPICE program. The proposed APF in Figure 3 is simulated using 0.13µm IBM CMOS technology parameters. Symmetrical DC power supply voltages are chosen as $V_{DD} = -V_{SS} = 0.75V$. The bias voltage V_B in Figure 2 is chosen to be -0.16V.

The aspect ratios (W/L) of the MOS transistors in Figure 2 are given in Table 1. The parasitic resistor of the CCII- X terminal is 187Ω and the value of L_X is very small. The passive components of the CM APF in Figure 3 are selected as $R_1 = 1k\Omega$, $R_2 = 1k\Omega$ (the effects of R_X are included) and C = 100pF, which results in a pole frequency of $f_o \cong 1.59MHz$.

TRANSISTOR TYPE	W / L
NMOS transistors	13µm/0.52µm
PMOS transistors	1.3µm/0.52µm

Table 1: Aspect ratios of the MOS transistors

The gain and phase responses of the proposed CM APF are shown in Figure 4. Sinusoidal input signals with peak value of 100µA at frequencies of 100kHz, 500kHz, 1MHz, 10MHz and 100MHz are separately applied to determine the time-domain performance. The inputs and their corresponding outputs are given in Figures 5 to 9. It can be seen that the outputs of the CM APF have some offset currents which arise from the non-idealities of the CCII- MOS transistors.

A sinusoidal input current with a peak value of 100µA at the frequency of 1.59MHz is applied to the CM APF. Also, the widths of only the M_3, M_4 and M_5 transistors with step of 0.13µm are varied between 11.7µm and 14.3µm. The input and output currents of the CM APF circuit are shown in Figure 10, where it can also be seen that these variations of the parameter W affect the offset currents of the CM APF.

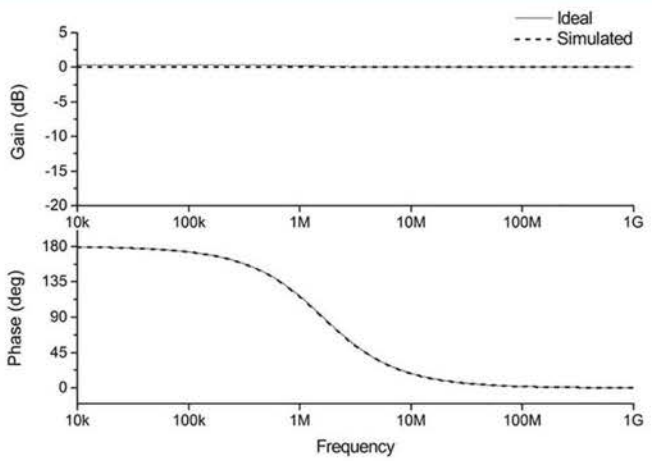

Figure 4: Gain and phase response of the suggested APF circuit

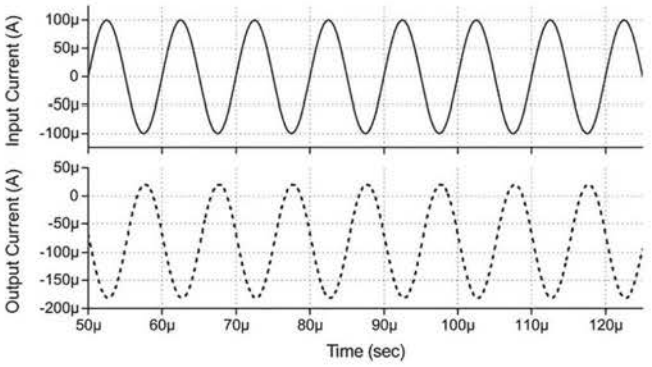

Figure 5: Input and output of the suggested APF at 100kHz

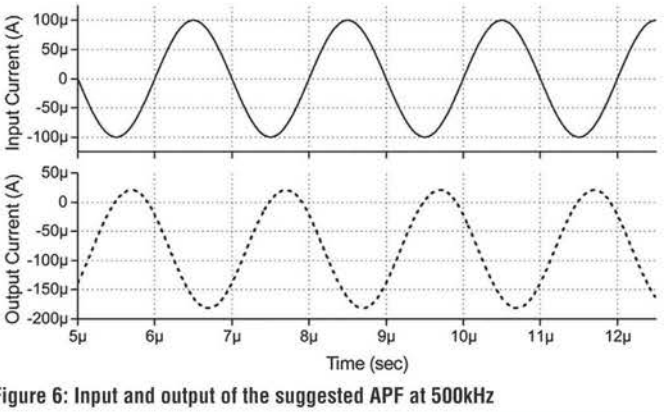

Figure 6: Input and output of the suggested APF at 500kHz

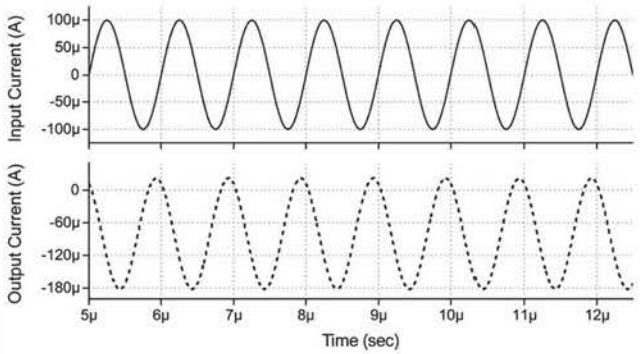

Figure 7: Input and output of the proposed APF at 1MHz

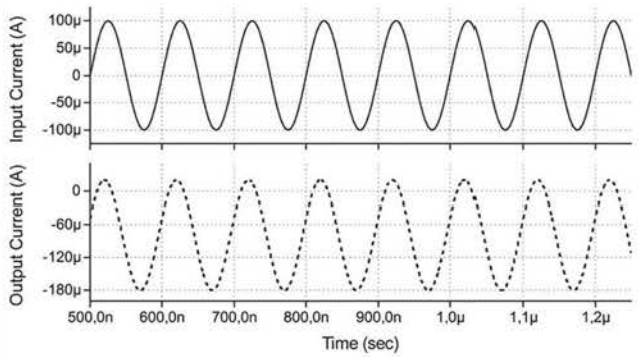

Figure 8: Input and output of the proposed APF at 10MHz

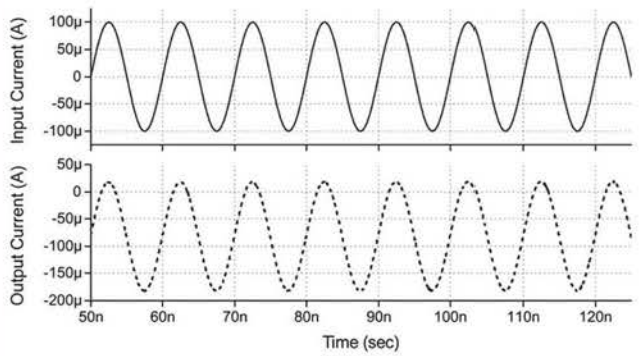

Figure 9: Input and output of the proposed APF at 100MHz

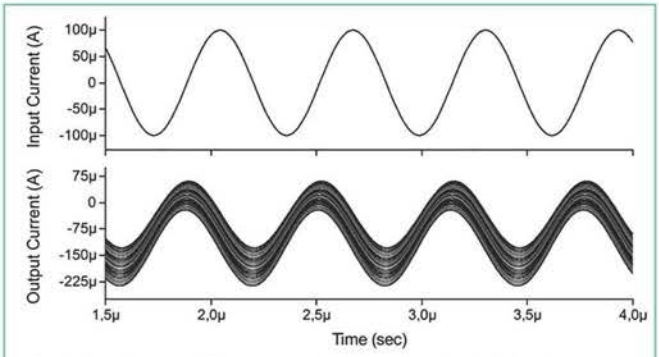

Figure 10: Analysis of the proposed APF by changing W of the transistors M_3, M_4 and M_5

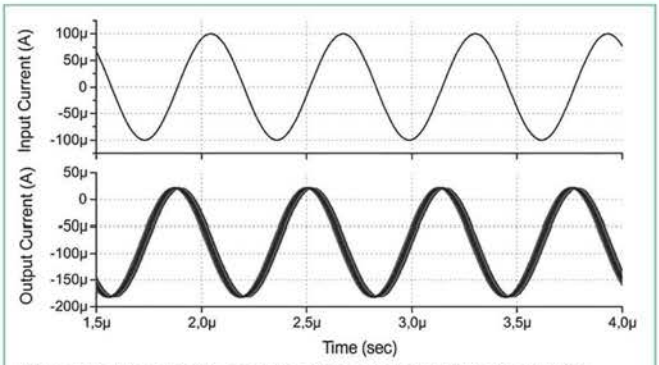

Figure 11: Monte Carlo analysis of the suggested APF circuit with changing values of C

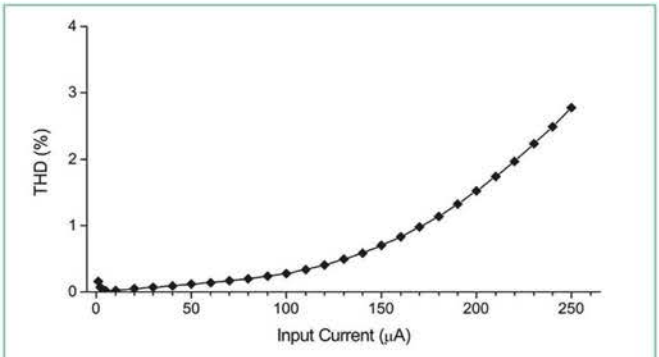

Figure 12: THD versus peak value of the applied sinusoidal signal for the suggested APF

A Monte Carlo analysis is performed with fifty runs for variations of 20% of the capacitance C in the CM APF, to which a sinusoidal input current with peak value of 100µA at 1.59MHz is applied. The input and output currents are shown in Figure 11, where it can be seen that a change in capacitor values varies with CM APF's resonance frequency.

Total power dissipation of the CM APF is calculated as 0.77mW; total harmonic distortion (THD) variations with respect to the peak value of the applied sinusoidal current at 1.59MHz are shown in Figure 12.

Conclusion

CM first-order APF using only two grounded resistors, a floating capacitor and a single CCII- which consumes low power. Nevertheless, it needs a single matching constraint. Also, it does not have low input and high output impedances.

A number of time-domain and frequency-domain simulations were performed to verify the theory. There is a small discrepancy between the ideal and the simulations, which can be attributed to the non-idealities of the CCII-, such as the frequency-dependent non-ideal gain and parasitic impedances. ●