VOLTAGE-MODE MULTIFUNCTIONAL FILTER EMPLOYING TWO DO-CCII AND TWO GROUNDED CAPACITORS

FIRAT YUCEL FROM AKDENIZ UNIVERSITY AND **ERKAN YUCE** FROM PAMUKKALE UNIVERSITY, BOTH IN TURKEY, PRESENT THEIR DESIGN OF A VOLTAGE-MODE MULTIFUNCTIONAL FILTER USING TWO DUAL-OUTPUT SECOND-GENERATION CURRENT CONVEYORS

Analog filters are widely used in a number of applications, including communications and instrumentation, to eliminate unwanted signals. It is well-known that current-mode (CM) active devices such as second-generation current conveyors (CCIIs) offer wider bandwidth, higher linearity and greater dynamic range, and require fewer active devices when compared to their voltage-mode (VM) counterparts, such as operational amplifiers.

We have now created a VM multifunctional filter that can simultaneously realize lowpass (LP), bandpass (BP) and highpass (HP) responses from the same topology, and without the need for any critical passive-component matching conditions. However, it does require extra circuitry to provide notch and allpass filter responses, and it also doesn't have high input and low output impedances, so extra buffers are needed.

Circuit Description

A DO-CCII is defined by the following matrix equation:

$$\begin{bmatrix} V_X \\ I_Y \\ I_{Z+} \\ I_{Z-} \end{bmatrix} = \begin{bmatrix} \beta & 0 \\ 0 & 0 \\ 0 & \alpha \\ 0 & -\gamma \end{bmatrix} \begin{bmatrix} V_Y \\ I_X \end{bmatrix} \quad (1)$$

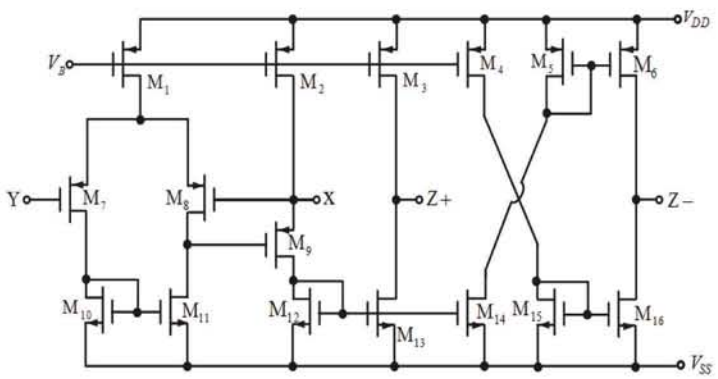

Figure 2: Internal structure of the DO-CCII

Transistor Type	W / L
PMOS transistors, M1-M8	41.6 µm/0.52 µm
PMOS transistor, M9	83.2 µm/0.52 µm
NMOS transistors, M10-M16	13.0 µm/0.52 µm

Table 1: Aspect ratios of the MOS transistors of the DO-CCII in Figure 2

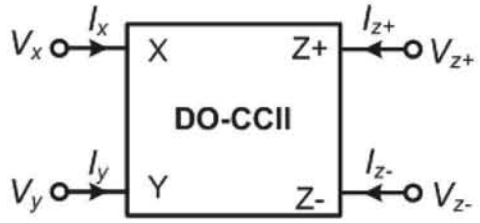

Figure 1: Electrical symbol of the DO-CCII

where β is a frequency-dependent non-ideal voltage gain, α and γ are frequency-dependent non-ideal current gains, and ideally should all be unity. At sufficiently low frequencies, α, β and γ can be presented as $\alpha = 1 - \varepsilon_\alpha$ ($|\varepsilon_\alpha| << 1$), $\beta = 1 - \varepsilon_\beta$ ($|\varepsilon_\beta| << 1$) and $\gamma = 1 - \varepsilon_\gamma$ ($|\varepsilon_\gamma| << 1$), where ε_α, ε_β and ε_γ are tracking errors of the associated gains and are ideally zero. The electrical symbol of the DO-CCII is shown in Figure 1.

The internal structure of the DO-CCII used in our simulations is shown in Figure 2, first suggested by W. Surakampontorn et al. It is assumed that all the MOS transistors in Figure 2 are operated in saturation region, and connected so as to prevent any body effects.

The Proposed Voltage-Mode Multifunctional Filter

The proposed VM filter is shown in Figure 3. Here, the ideal BP, LP and HP transfer functions (TFs) can be respectively found as follows:

$$\frac{V_{BP}}{V_{in}} = -\frac{C_2 R_3 s}{D(s)} \quad (2a)$$

$$\frac{V_{LP}}{V_{in}} = \frac{1}{D(s)} \quad (2b)$$

$$\frac{V_{HP}}{V_{in}} = \frac{C_1 C_2 R_1 R_3 s^2}{D(s)} \quad (2c)$$

where D(s) is described as the characteristic equation of the filter, given as:

$$D(s) = 1 + C_2 R_3 s + C_1 C_2 R_1 R_3 s^2 \quad (3)$$

Non-ideal BP, LP and HP TFs of the proposed filter are respectively evaluated as:

$$\frac{V_{BP}}{V_{in}} = -\frac{\alpha_2 C_2 R_1 s}{D_n(s)} \quad (4a)$$

$$\frac{V_{LP}}{V_{in}} = \frac{\alpha_1 \alpha_2}{D_n(s)} \quad (4b)$$

$$\frac{V_{HP}}{V_{in}} = \frac{(\gamma_2 - \alpha_2 \gamma_1) C_2 R_3 s + \gamma_2 C_1 C_2 R_1 R_3 s^2}{D_n(s)} \quad (4c)$$

where $D_n(s)$ is described as:

$$D_n(s) = \alpha_1 \alpha_2 \beta_2 + C_2 R_3 s + C_1 C_2 R_1 R_3 s^2 \quad (5)$$

Angular resonance frequency (ω_{on}) and quality factor (Q_n) derived from $D_n(s)$ in Equation 5 are respectively calculated as:

$$\omega_{on} = \sqrt{\frac{\alpha_1 \alpha_2 \beta_2}{C_1 C_2 R_1 R_3}} \quad (6a)$$

$$Q_n = \sqrt{\frac{\alpha_1 \alpha_2 \beta_2 C_1 R_1}{C_2 R_3}} \quad (6b)$$

Simulation Results

Simulations of the proposed filter are performed using the SPICE program with 0.13µm IBM CMOS technology parameters. Symmetrical DC power supply voltages are selected as ±0.75V. Bias voltage V_B in Figure 2 is chosen as 0.37V. Aspect ratios (W/L) of the MOS transistors of the DO-CCII in Figure 2 are given in Table 1. The passive components of the filter in Figure 3 are selected as $R_1 = R_2 = R_3 = 1k\Omega$ and $C_1 = C_2 = 50pF$, resulting in $f_o \cong 3.18MHz$ and $Q = 1$.

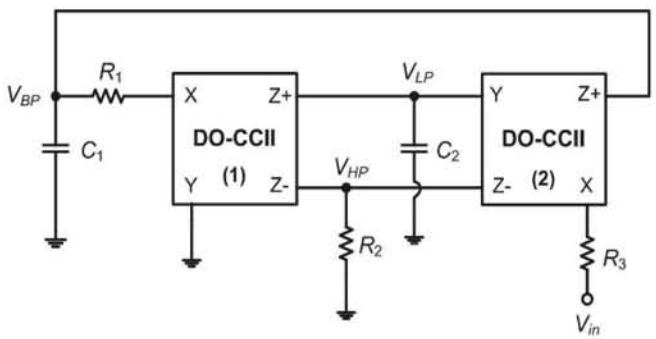

Figure 3: The proposed voltage-mode multifunctional filter

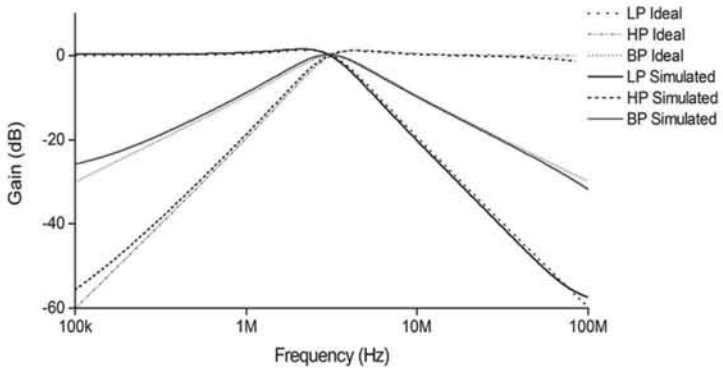

Figure 4: Gain responses of the proposed filter

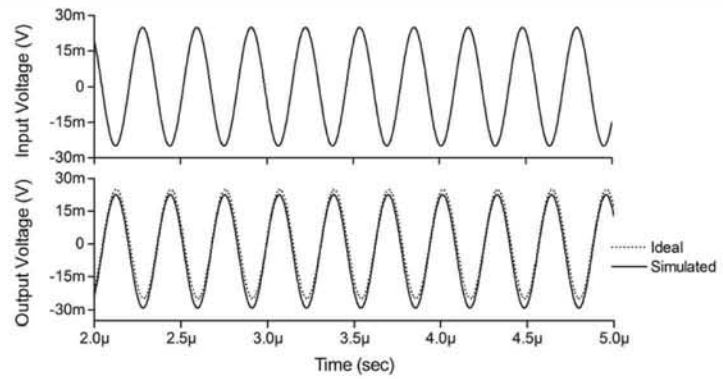

Figure 5: Time-domain bandpass response for the proposed filter

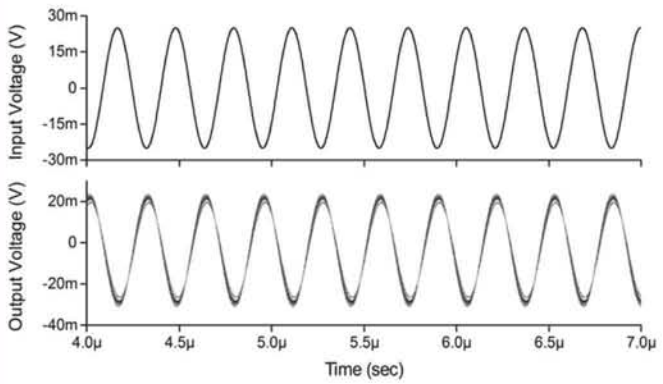

Figure 6: Monte Carlo analysis of the proposed filter with different resistor values R_1, R_2 and R_3

Gain responses of the proposed filter in Figure 3 are shown in Figure 4. Ideal and simulated results of the gains are close to each other.

A sinusoidal input signal with peak value of 25mV at the

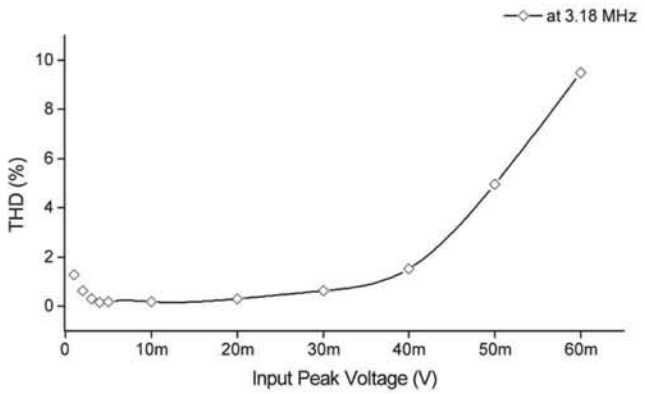

Figure 7: THD against sinusoidal input signal peak value for the proposed filter

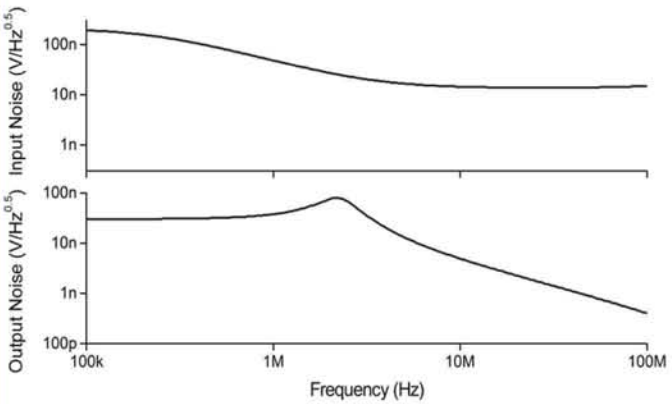

Figure 8: The proposed fitler's input and output noise versus frequency

resonance frequency is applied to the proposed filter in Figure 3. The input and corresponding ideal and simulated time-domain BP filter are shown in Figure 5.

A Monte Carlo analysis is performed with twenty runs for 10% variations of the resistors R_1, R_2 and R_3 for the proposed filter, where a sinusoidal input signal with peak value of 25mV at the resonance frequency. The input and corresponding BP output responses are shown in Figure 6.

Total power dissipation of the proposed filter is calculated in the simulations as 1.11mW. For the BP responses of the proposed filter, the total harmonic distortion (THD) variations with respect to peak value of the applied sinusoidal signal at the resonance frequency are shown in Figure 7; the respective input and output noise are shown in Figure 8.

Going Forward

The proposed filter does not have high input or low output impedances. Time domain and frequency domain simulation results confirm our theory; however, there is a small discrepancy between the ideal and simulation results, which arises from non-idealities of the DO-CCIIs, such as frequency-dependent non-ideal gains and parasitic impedances. ●

