Int. J. Electron. Commun. (AEÜ) 118 (2020) 153138

Contents lists available at ScienceDirect

International Journal of Electronics and Communications (AEÜ)

journal homepage: www.elsevier.com/locate/aeue

Regular paper

Supplementary CCII based second-order universal filter and quadrature oscillators

Firat Yucel [a], Erkan Yuce [b,*]

[a] Akdeniz University, Department of Informatics, 07070 Konyaalti, Antalya, Turkey
[b] Pamukkale University, Department of Electrical and Electronics Engineering, 20160 Kinikli, Denizli, Turkey

ARTICLE INFO

Article history:
Received 2 December 2019
Accepted 18 February 2020

Keywords:
Voltage-mode
Universal filter
Quadrature oscillator
Tunability

ABSTRACT

A voltage-mode universal biquadratic filter and two quadrature oscillators (QOs) based on CCIIs namely second-generation current conveyors are proposed. The proposed filter with one output and three inputs consists of two CCIIs, three resistors and two capacitors. It can provide all the standard second-order universal filter transfer functions with appropriate choice of input voltages. It also has the orthogonal control of the quality factor and angular resonance frequency. However, a resistive matching condition is required for the all-pass responses. The first proposed QO includes two CCIIs, three resistors and two grounded capacitors while the second one is composed of three plus-type CCIIs, three resistors and two grounded capacitors. By a single grounded resistor, oscillation frequencies of both of the proposed QOs can be controlled orthogonally. Furthermore, in order to confirm the theory, a lot of simulation and experimental results are given.

© 2020 Elsevier GmbH. All rights reserved.

1. Introduction

Filters are essential elements to eliminate undesired signals in a lot of areas such as telecommunications and instrumentation systems, and etc. CCIIs namely second-generation current conveyors [1–23] are extensively used in voltage-mode (VM) filter applications. Moreover, second-order universal filters can provide low-pass (LP), band-pass (BP), high-pass (HP), notch filter (NF) and all-pass (AP) filter responses. However, the filters in [2,4,6–9,17,22,23] do not have the feature of universality. The filters of [3,5,19] require a number of critical matching conditions to provide universal filter responses. Some filters [1,2,8,11,12,14,16–20, 22,23] contain three or more CCIIs which increase the chip area. Several filters [3,4,7,9,12,13,15,18,22] do not have the feature of orthogonal control of quality factor (Q) and angular resonance frequency (ω_o). The filter developed in [8] uses more than two capacitors. In other words, the number of capacitors in [8] is not canonical. To provide AP filter responses, the universal filters of [12,13,15,19–21] need an extra active device. The universal filters of [10,13,15,21] require additional three voltage followers (VFs) to obtain high input impedances. The filter of [22] with high input impedance can provide only AP filter and NF responses depending on passive element choice. In addition, its Q is low. Although the filter of [23] with high input impedance employs only grounded passive components, it can realize only band-pass response. As declared in [24], high frequency performance of the filter reported in [10] is restricted because one capacitor of it is attached in series to the X terminal. On the other hand, CCII based current-mode analog filters have been introduced in [25,26].

Sinusoidal oscillators [23,27–49] are widely used in telecommunications and control systems to generate sinusoidal output signals without requiring any external applied input signals. Quadrature oscillators (QOs) have two sinusoidal output signals. Moreover, phase differences between two output signals of the QOs are ideally 90°. One of the main advantages of the QOs is to mix the analog outputs, or inverted versions of the analog outputs, to produce two analog signals with any phase differences. Thus, the QOs are beneficial in generating reference analog signals for phase sensitive detectors used to measure small analog signals that are buried in noise whereas some oscillator configurations [31–34, 37,39,42–44,47,49] are not QO. The QO configuration proposed in [45] includes three capacitors. The QO circuit in [48] does not have the feature of a single resistor control. Some QOs [27,28,35,36] are made up of mixed-type CCIIs. Several QOs [38,40] with only grounded passive components are composed of a first-generation current conveyor (CCI) in addition to CCII(s). The QO introduced in [29] uses four generalized conveyors (GCs). One of the QOs proposed in [46] contains a minus-type modified CCII (MCCII-). The

* Corresponding author.
E-mail addresses: fyucel@akdeniz.edu.tr (F. Yucel), erkanyuce@yahoo.com (E. Yuce).

https://doi.org/10.1016/j.aeue.2020.153138
1434-8411/© 2020 Elsevier GmbH. All rights reserved.

QO of [49] uses an OTA; therefore, its high frequency performance is restricted [50].

A VM universal biquadratic filter and two QOs including CCIIs are proposed in this study. The proposed filter with one output and three inputs consists of two CCIIs, three resistors and two capacitors. It can realize all the standard second-order universal filter transfer functions (TFs), LP, BP, HP, NF and AP ones. One of the three inputs is high impedance and it does not need an additional active device. It also has the orthogonal control of Q and ω_o but for AP responses, it requires single passive element matching constraint. As declared in [50], it can be performed as an electronically tunable filter. The first proposed QO includes two CCIIs while the second one consists of three CCII+s. Moreover, both QOs employ three resistors and two grounded capacitors. Contrary to QOs of [23,41], the second proposed QO can be tuned electronically [50]. By a single grounded resistor, both of the proposed QOs can be easily controlled. In order to confirm the theory, a lot of SPICE simulations and experimental results are included.

The organization of the paper is achieved such that after introduction in Section 1, the CCII is treated in Section 2. The proposed universal filter structure and two QOs are shown in Sections 3 and 4, respectively. Parasitic impedance effects on the proposed universal filter are investigated in Section 5. Simulation and experimental results for all the proposed circuits are respectively given in Sections 6 and 7 while several conclusion remarks are drawn in Section 8.

2. Circuit description

Electrical symbol of the CCII with four terminals is given in Fig. 1. The CCII with four terminals can be defined by

$$\begin{bmatrix} V_X \\ I_Y \\ I_{Z+} \\ I_{Z-} \end{bmatrix} = \begin{bmatrix} \beta(s) & 0 \\ 0 & 0 \\ 0 & \alpha(s) \\ 0 & -\gamma(s) \end{bmatrix} \begin{bmatrix} V_Y \\ I_X \end{bmatrix} \tag{1}$$

Here, $\alpha(s)$, $\gamma(s)$ and $\beta(s)$ that are related gains can be respectively described as in the following [48]:

$$\alpha(s) = \frac{1-\varepsilon_\alpha}{1+\frac{s}{\omega_\alpha}} \tag{2.a}$$

$$\gamma(s) = \frac{a(1-\varepsilon_\gamma)}{1+\frac{s}{\omega_\gamma}} \tag{2.b}$$

$$\beta(s) = \frac{1-\varepsilon_\beta}{1+\frac{s}{\omega_\beta}} \tag{2.c}$$

a in Eq. (2.b) is chosen as 1 for the proposed VM universal filter while a is chosen as 2 for the first proposed QO. Apart from these, $|\varepsilon_\alpha| \ll 1$, $|\varepsilon_\gamma| \ll 1$ and $|\varepsilon_\beta| \ll 1$ [46] while ω_α, ω_γ and ω_β that are all ideally infinity are angular pole frequencies of the related gains. The CCII defined in matrix Eq. (1) can be represented in Fig. 2 where R_{in} is ideally infinity.

γ of the CCII in Fig. 3 [51] can be easily adjusted by changing W/L of M_6 and W/L of M_{16}. Internal structure of the CCII [51] given in Fig. 3 employs sixteen MOS transistors operated in saturation

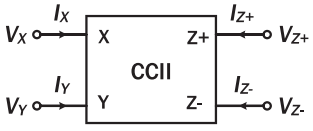

Fig. 1. Symbolic representation of the CCII with four terminals.

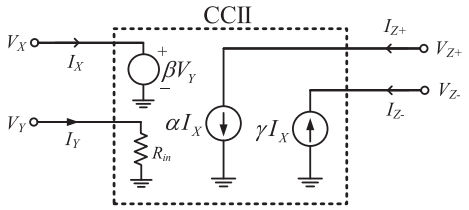

Fig. 2. Representation of the CCII.

region. In Fig. 3, M_5 – M_6, M_{10} – M_{11}, M_{12} – M_{14} and M_{15} – M_{16} are current mirrors. The parasitic resistors of the CCII in Fig. 3 are evaluated as

$$R_Y \cong \infty \tag{3.a}$$

$$R_X \cong \frac{1}{g_{m9}(1+g_{m8}(r_{o8}//r_{o11}))} \tag{3.b}$$

$$R_{Z+} = r_{o3}//r_{o13} \tag{3.c}$$

$$R_{Z-} = r_{o6}//r_{o16} \tag{3.d}$$

3. Proposed universal filter

The proposed VM universal filter shown in Fig. 4 can provide LP, BP, HP, NF and AP filter TFs with appropriate input voltage selections without requiring any additional active devices. Ideally, output voltage, V_o, of the proposed filter in Fig. 4 can be evaluated by

$$V_o = \frac{C_1C_2R_2R_3V_1s^2 - C_2R_2V_2s + V_3}{C_1C_2R_2R_3s^2 + \frac{C_2R_2R_3}{R_1}s + 1} \tag{4}$$

From Eq. (4), it is seen that

1. If V_1 = V_2 = 0 and V_3 = V_{in} are chosen, a LP filter TF can be obtained with V_o/V_{in}.
2. If V_1 = V_3 = 0 and V_2 = V_{in} are chosen, a BP filter TF can be obtained with V_o/V_{in}.
3. If V_2 = V_3 = 0 and V_1 = V_{in} are chosen, a HP filter TF can be obtained with V_o/V_{in}.
4. If V_2 = 0 and V_1 = V_3 = V_{in} are chosen, a NF TF can be obtained with V_o/V_{in}.
5. If V_1 = V_2 = V_3 = V_{in} and R_3 = R_1 are chosen, an AP filter TF can be obtained with V_o/V_{in}.

From Eq. (4), Q and ω_o are respectively evaluated as follow:

$$Q = R_1\sqrt{\frac{C_1}{C_2R_2R_3}} \tag{5.a}$$

$$\omega_o = \frac{1}{\sqrt{C_1C_2R_2R_3}} \tag{5.b}$$

It is seen from Eqs. (5) that without disturbing ω_o, Q can be orthogonally controlled through R_1. If only non-ideal gains are considered, output voltage of the proposed filter can be obtained as

$$V_{on} = \frac{n_1V_1s^2 + n_2V_2s + n_3sV_3 + n_4V_3}{d_1s^2 + d_2s + d_3} \tag{6}$$

where the related coefficients of the denominator and numerator are calculated as in the following:

$$n_1 = d_1 = C_1C_2R_2R_3 \tag{7.a}$$

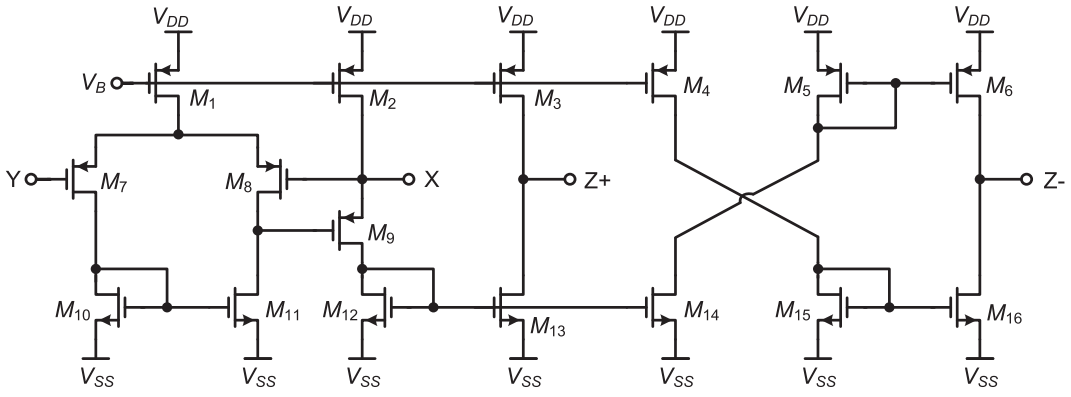

Fig. 3. Internal structure of the CCII [51].

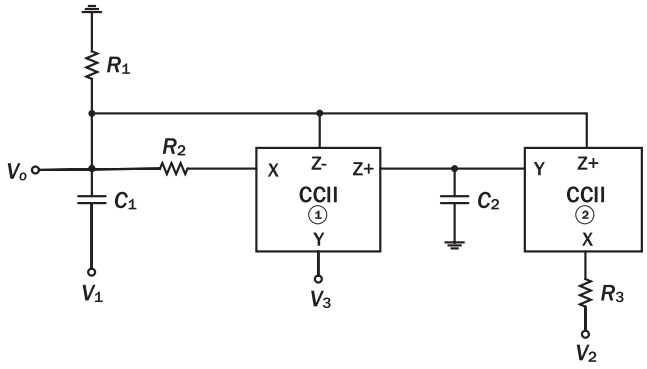

Fig. 4. Proposed voltage-mode universal biquadratic filter.

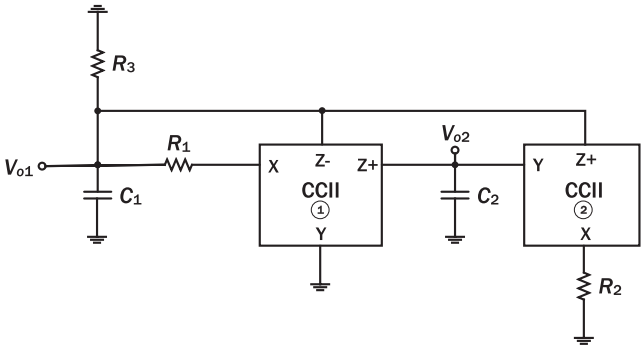

Fig. 5. The first proposed quadrature oscillator.

$$n_2 = -C_2R_2\alpha_2 \tag{7.b}$$

$$n_3 = C_2R_3\beta_1(1-\gamma_1) \tag{7.c}$$

$$n_4 = \alpha_1\alpha_2\beta_1\beta_2 \tag{7.d}$$

$$d_2 = C_2R_3\left(\frac{R_2}{R_1}+1-\gamma_1\right) \tag{7.e}$$

$$d_3 = \alpha_1\alpha_2\beta_2 \tag{7.f}$$

One observes from Eq. (7.e) that $R_2/R_1 + 1 > \gamma_1$ must be chosen to obtain stable filter responses [52]. From Eqs. (6) and (7), Q and ω_o with non-ideal gains are respectively obtained as below:

$$Q_n = \frac{1}{1+\frac{R_2}{R_1}-\gamma_1}\sqrt{\frac{\alpha_1\alpha_2\beta_2C_1R_2}{C_2R_3}} \tag{8.a}$$

$$\omega_{on} = \sqrt{\frac{\alpha_1\alpha_2\beta_2}{C_1C_2R_2R_3}} \tag{8.b}$$

4. Proposed quadrature oscillators

Two QOs are presented in this section. The first one shown in Fig. 5 contains two CCIIs, three resistors (two of them are grounded) and two grounded capacitors. In this configuration, γ of the first CCII is chosen as 2 to ensure oscillation condition (OC). For the first proposed QO, the characteristic equation is found as

$$D(s) = s^2C_1C_2R_1R_2 + sC_2R_2\left(\frac{R_1}{R_3}-1\right)+1 \tag{9}$$

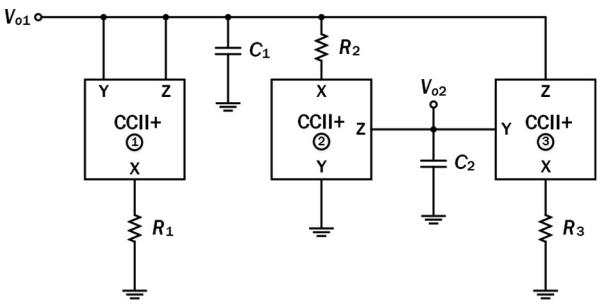

Fig. 6. The second proposed quadrature oscillator.

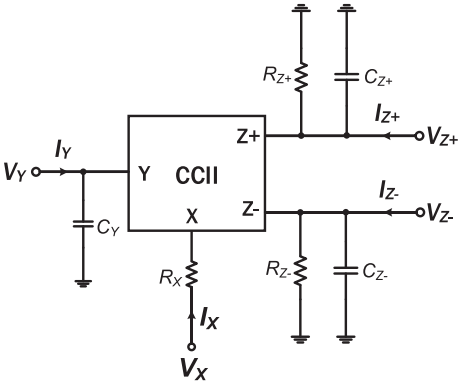

Fig. 7. The CCII with its parasitic impedances.

Table 1
Dimensions of the MOS transistors for the proposed universal filter.

Transistor Name	W/L (μm/μm)
PMOS transistors M_1 - M_8	41.6/0.52
NMOS transistors M_{10} - M_{16}	13/0.52
PMOS transistor M_9	130/0.52

Table 2
Dimensions of the MOS transistors for the first proposed quadrature oscillator.

Transistor Name	W/L (μm/μm)
PMOS transistors M_1 - M_5, M_7, M_8	41.6/0.52
PMOS transistor M_6	83.2/0.52
NMOS transistors M_{10} - M_{15}	13/0.52
NMOS transistor M_{16}	26/0.52
PMOS transistor M_9	130/0.52

From Eq. (9), OC is evaluated by

$$R_3 \geqslant R_1 \tag{10}$$

From Eq. (9), oscillation frequency (OF) is calculated as

$$f_o = \frac{1}{2\pi\sqrt{C_1C_2R_1R_2}} \tag{11}$$

One observes from Eqs. (10) and (11) that OF can be easily controlled through a grounded resistor, R_2 without disturbing OC. Apart from this, if non-ideal gains are considered, Eq. (9) turns to

$$D_n(s) = s^2C_1C_2R_1R_2 + sC_2R_2\left(\frac{R_1}{R_3} + 1 - \gamma_1\right) + \alpha_1\alpha_2\beta_2 \tag{12}$$

It is observed from Eq. (12) that γ_1 should be chosen greater than unity but we choose as 2 in this paper. Also, OF and OC are respectively evaluated as

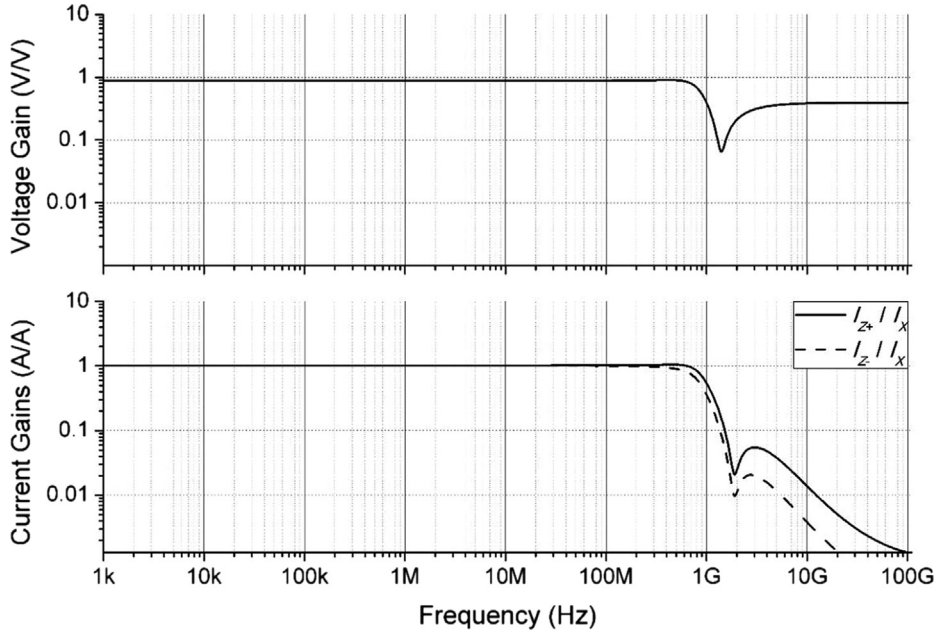

Fig. 8. The voltage gain and the current gains of the internal structure of the CCII in Fig. 3 versus frequency.

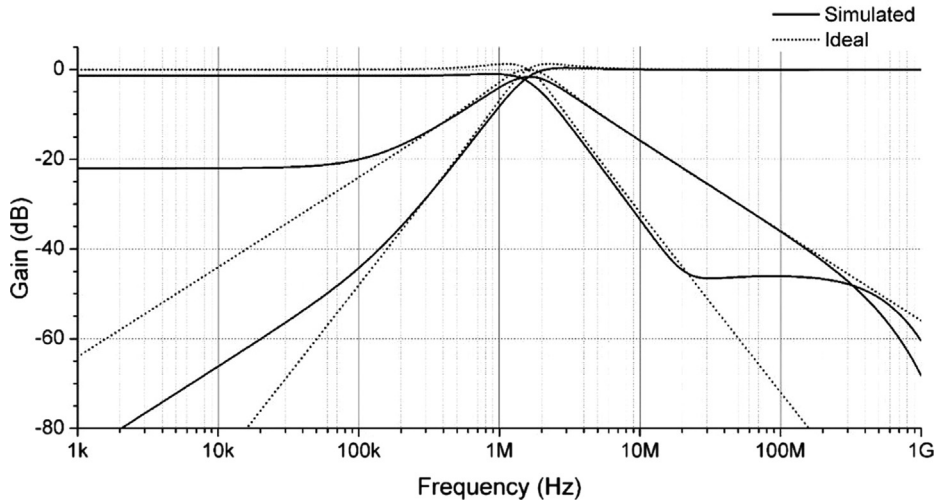

Fig. 9. Low-pass, band-pass and high-pass gain responses against frequency.

$$f_o = \frac{1}{2\pi}\sqrt{\frac{\alpha_1\alpha_2\beta_2}{C_1C_2R_1R_2}} \tag{13.a}$$

$$R_3 \geqslant \frac{R_1}{\gamma_1 - 1} \tag{13.b}$$

The second proposed QO which is denoted in Fig. 6 includes three CCII+s, three resistors (two of them are grounded) and two grounded capacitors. The characteristic equation of the second proposed QO is given by

$$D(s) = s^2C_1C_2R_2R_3 + sC_2R_3\left(1 - \frac{R_2}{R_1}\right) + 1 \tag{14}$$

From Eq. (14), OC can be found as

$$R_2 \geqslant R_1 \tag{15}$$

From Eq. (14), OF is obtained as follows:

$$f_o = \frac{1}{2\pi\sqrt{C_1C_2R_2R_3}} \tag{16}$$

It is seen from Eqs. (15) and (16) that OF can be easily controlled via grounded resistor R_3 without disturbing OC. On the other hand, if non-ideal gains are considered, $D(s)$ in Eq. (14) converts to

$$D_n(s) = s^2C_1C_2R_2R_3 + sC_2R_3\left(1 - \frac{\alpha_1\beta_1R_2}{R_1}\right) + \alpha_2\alpha_3\beta_3 \tag{17}$$

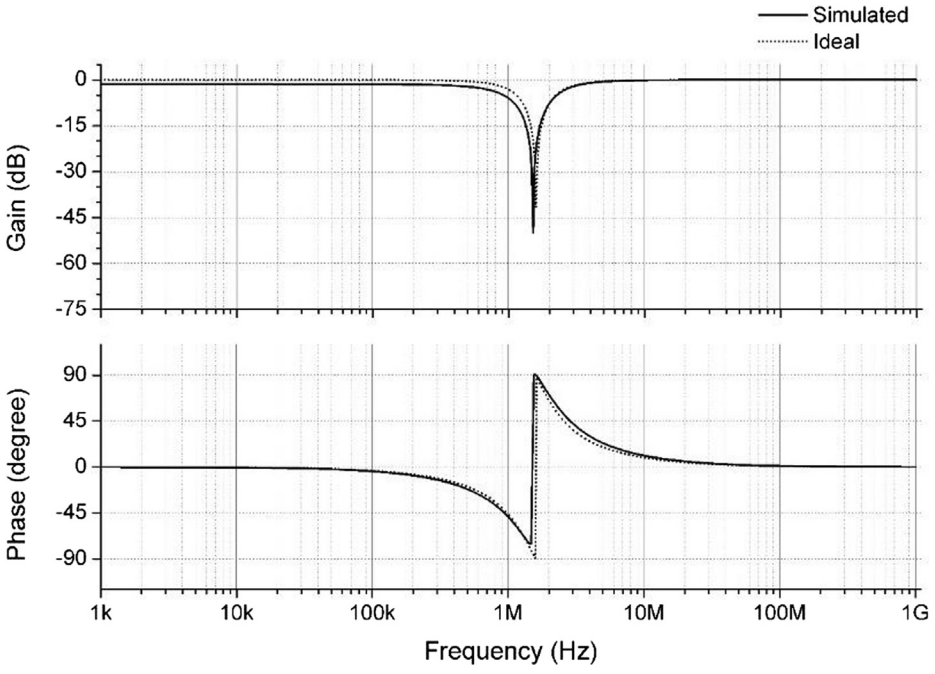

Fig. 10. Notch filter gain and phase response against frequency.

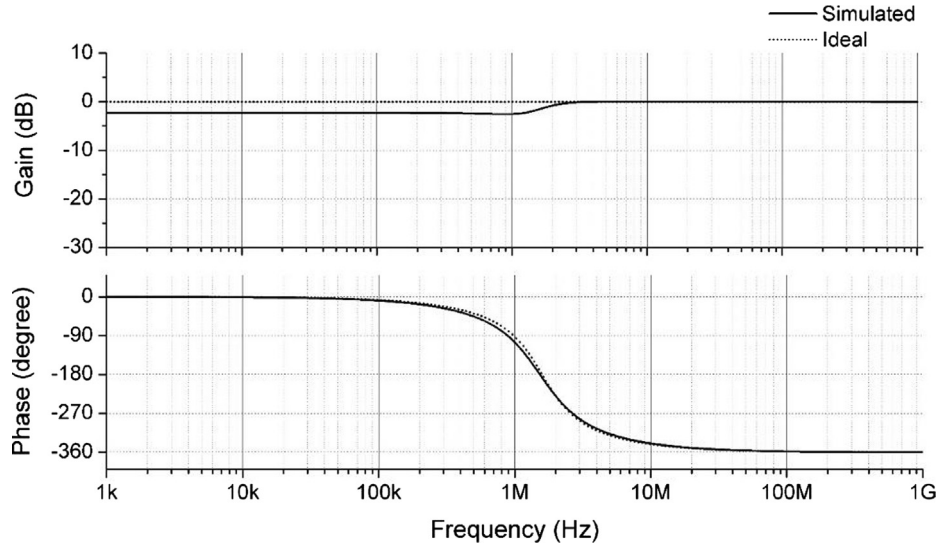

Fig. 11. All-pass filter gain and phase responses versus frequency.

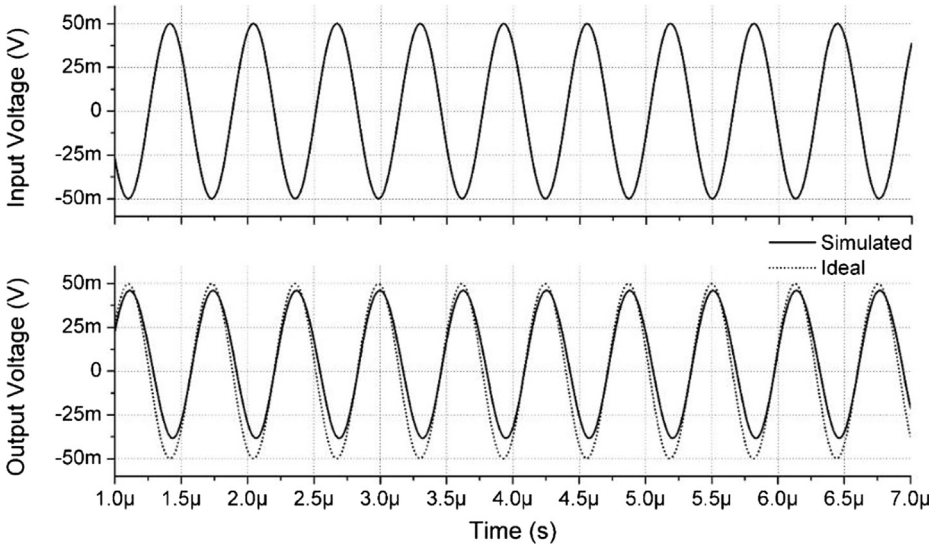

Fig. 12. Time domain all-pass filter responses of the proposed VM universal filter for applying 100 mV peak-to-peak sinusoidal input voltage signal at 1.59 MHz.

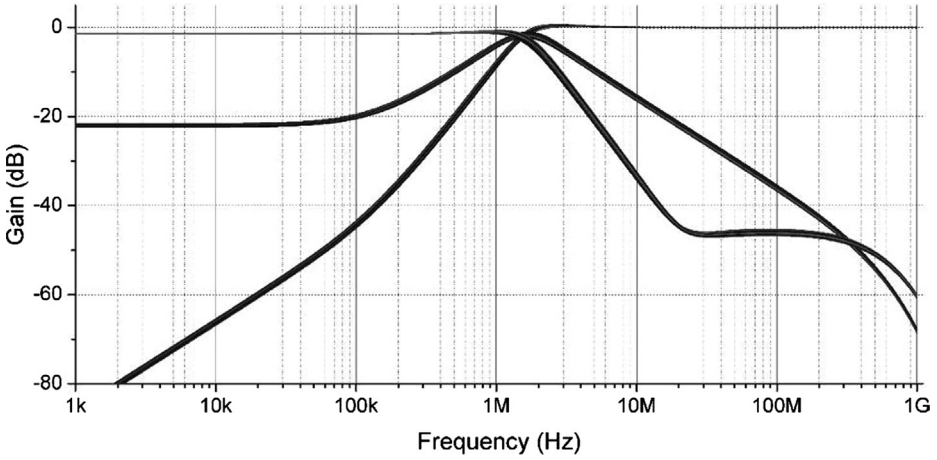

Fig. 13. Monte Carlo analyses with fifty runnings for 5% variations of all the resistors and capacitors in uniform deviation for the LP, BP and HP gain responses versus frequency.

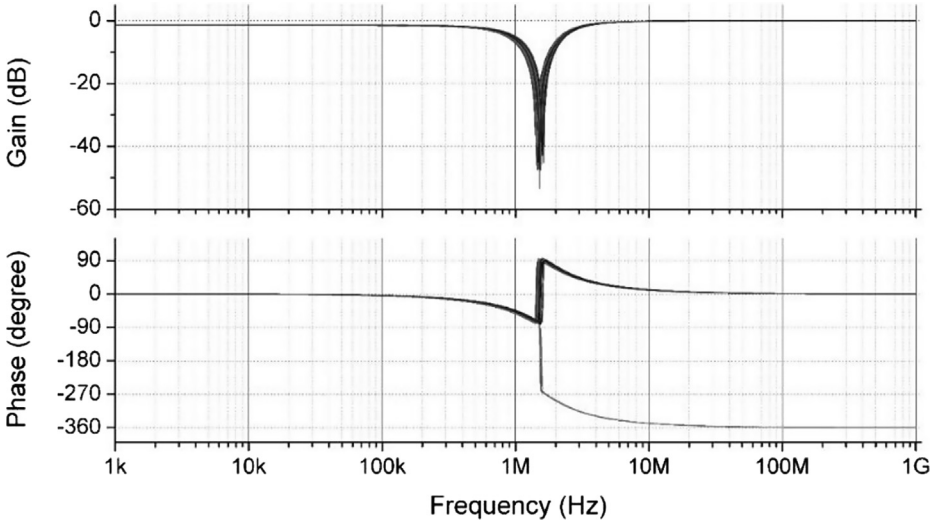

Fig. 14. A Monte Carlo analysis with fifty runnings for 5% variations of all the resistors and capacitors in uniform deviation for the notch filter gain and phase responses versus frequency.

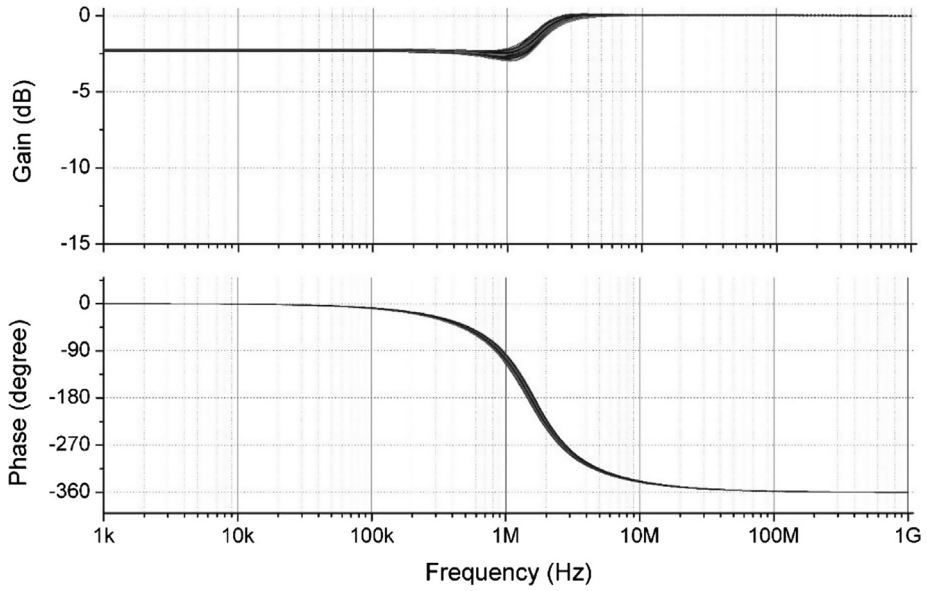

Fig. 15. A Monte Carlo analysis with fifty runnings for 5% variations of all the resistors and capacitors in uniform deviation for the AP gain and phase responses of the proposed filter.

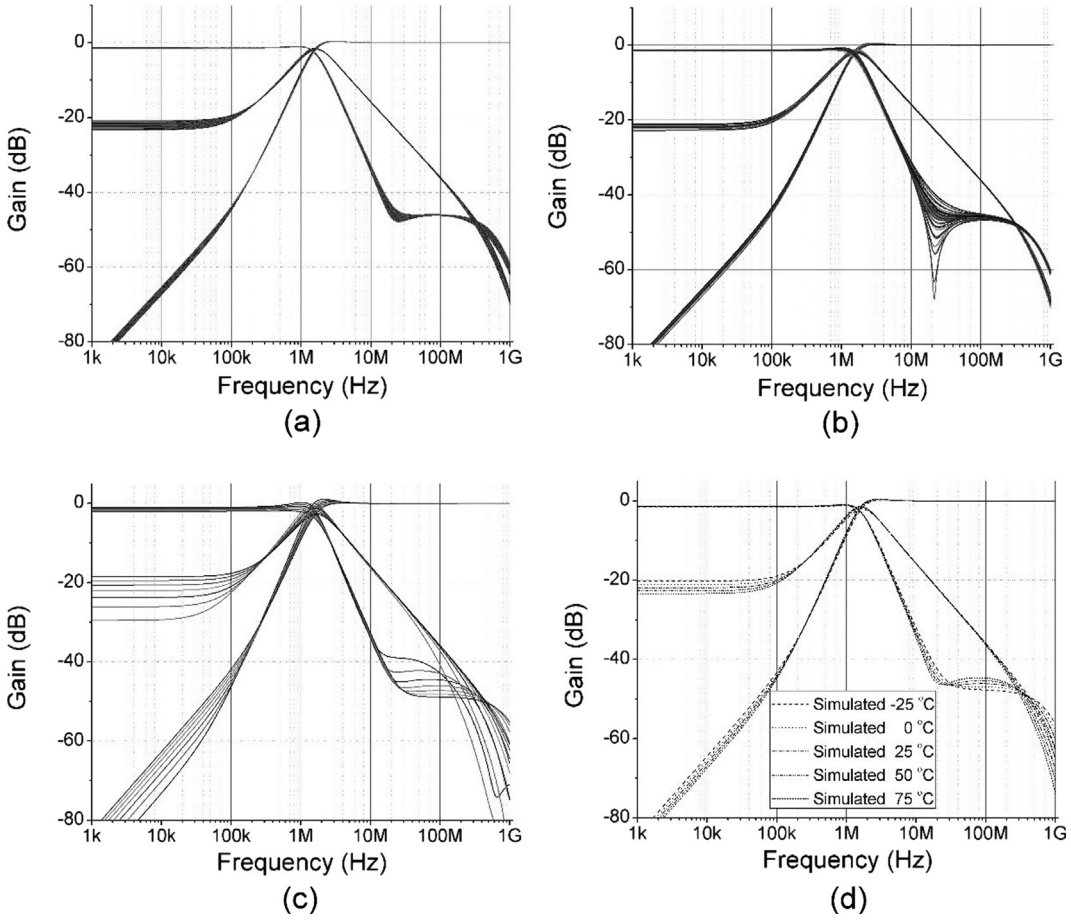

Fig. 16. PVT analyses for the LP, BP and HP filter gain responses versus frequency. **(a)** Change of the channel widths of the MOS transistors, **(b)** Change of the threshold voltages of the MOS transistors, **(c)** Change of power supply voltages, **(d)** Change of operating temperatures.

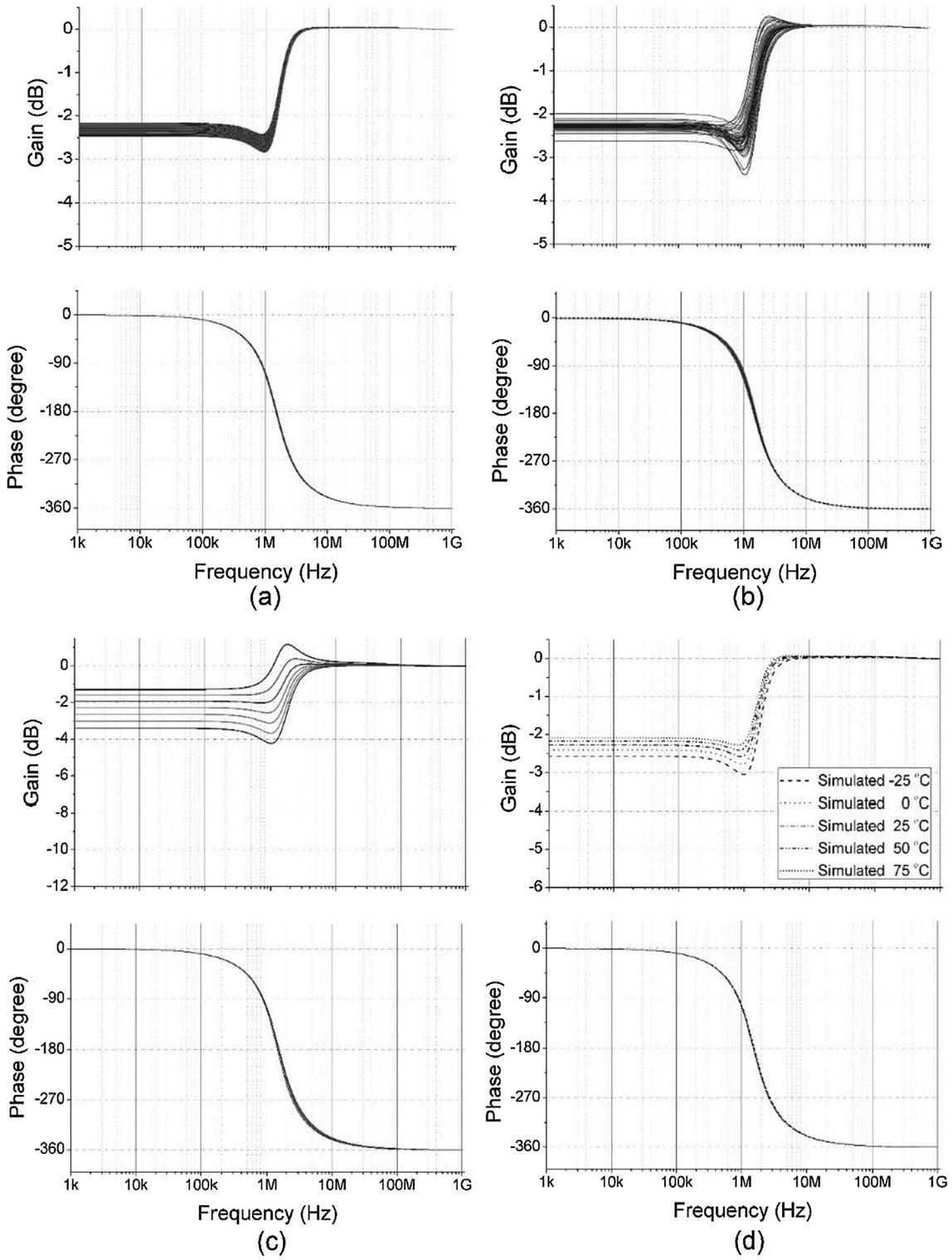

Fig. 17. A PVT analysis for the gain and phase responses of the AP filter against frequency. **(a)** Change of the channel widths of the MOS transistors, **(b)** Change of the threshold voltages of the MOS transistors, **(c)** Change of power supply voltages, **(d)** Change of operating temperatures.

From Eq. (17), OF and OC are respectively evaluated as

$$f_o = \frac{1}{2\pi}\sqrt{\frac{\alpha_2\alpha_3\beta_3}{C_1C_2R_2R_3}} \tag{18.a}$$

$$R_2 \geqslant \frac{R_1}{\alpha_1\beta_1} \tag{18.b}$$

5. Parasitic impedance effects

The CCII with its X, Z+, Z- and Y terminal parasitic impedances is depicted in Fig. 7.

If only parasitic impedances are considered, output voltage of the proposed filter can be obtained as

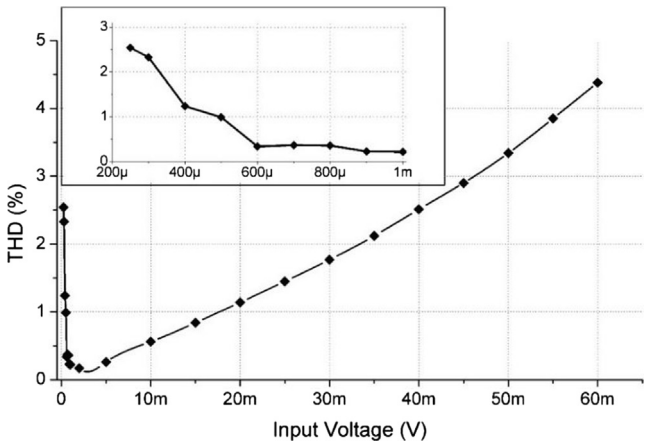

Fig. 18. THD variations for the AP filter against applied peak sinusoidal input voltages.

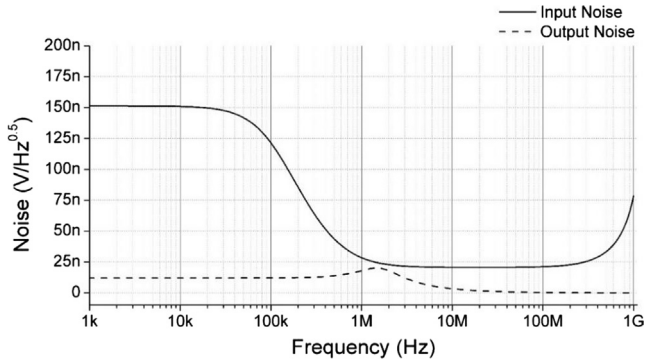

Fig. 19. Input and output noise variations of the BP filter response against frequency.

$$V_{op} = \frac{n_1 V_1 s + n_2 V_1 s^2 - n_3 V_2 - n_4 V_2 s + n_5 V_3}{d_1 s^2 + d_2 s + d_3} \tag{19}$$

Here, the related coefficients of the denominator and numerator are evaluated as in the following:

$$n_1 = C_1(R_1 // R_{Z1-} // R_{Z2+})(R_2 + R_{X1})(R_3 + R_{X2}) \tag{20.a}$$

$$n_2 = C_1(C_2 + C_{Z1+} + C_{Y2})(R_1 // R_{Z1-} // R_{Z2+})(R_2 + R_{X1})(R_3 + R_{X2})R_{Z1+} \tag{20.b}$$

$$n_3 = (R_1 // R_{Z1-} // R_{Z2+})(R_2 + R_{X1}) \tag{20.c}$$

$$n_4 = (C_2 + C_{Z1+} + C_{Y2})(R_1 // R_{Z1-} // R_{Z2+})(R_2 + R_{X1})R_{Z1+} \tag{20.d}$$

$$n_5 = (R_1 // R_{Z1-} // R_{Z2+})R_{Z1+} \tag{20.e}$$

$$d_1 = (C_1 + C_{Z1-} + C_{Z2+})(C_2 + C_{Z1+} + C_{Y2})(R_1 // R_{Z1-} // R_{Z2+}) \times (R_2 + R_{X1})(R_3 + R_{X2})R_{Z1+} \tag{20.f}$$

$$d_2 = ((C_1 + C_{Z1-} + C_{Z2+})R_1 + (C_2 + C_{Z1+} + C_{Y2})R_{Z1+})(R_2 + R_{X1})(R_3 + R_{X2}) \tag{20.g}$$

$$d_3 = (R_1 // R_{Z1-} // R_{Z2+})R_{Z1+} + (R_2 + R_{X1})(R_3 + R_{X2}) \tag{20.h}$$

One observes from Eq. (19) that $\omega\eta_1 \ll \omega^2\eta_2$ and $\eta_3 \ll \omega\eta_4$ in frequency domain should be satisfied for proper operation of the proposed filter. Thus, the following conditions is obtained:

$$1 << \omega(C_2 + C_{Z1+} + C_{Y2})R_{Z1+} \tag{21}$$

From Eq. (21), the proposed filter can be operated properly in the following frequency range:

$$f \geqslant \frac{10}{2\pi}\frac{1}{(C_2 + C_{Z1+} + C_{Y2})R_{Z1+}} \tag{22}$$

6. Simulation results

0.13 μm IBM CMOS technology parameters [53] are used in simulations of all the proposed circuits in this work. The DC supply voltages $V_{DD} = -V_{SS} = 0.75$ V and $V_B = 0.23$ V in Fig. 3 are chosen. Dimensions of all the MOS transistors are respectively given in Tables 1 and 2 for the proposed filter and the first proposed QO. On the other hand, CCIIs of the second proposed QO do not have Z- terminal. Aspect ratios given in Table 1 are used for it. Furthermore, parasitic impedances; $R_X \cong 35\ \Omega$, $R_{Z+} \cong 11.58$ kΩ, $R_{Z-} \cong 11.18$ kΩ, $C_{Z+} \cong 25$ fF, $C_{Z-} \cong 29.6$ fF and $C_Y \cong 53.8$ fF are found through SPICE program. The voltage gain (V_X/V_Y) and the current gains (I_{Z+}/I_X and I_{Z-}/I_X) of the internal structure of the CCII demonstrated in Fig. 3 with respect to frequency are denoted in Fig. 8. Furthermore, $\alpha_o \cong 1.017$, $\beta_o \cong 0.88$, $\gamma_o \cong 1.011$, $f_\alpha \cong 867$ MHz, f_β-

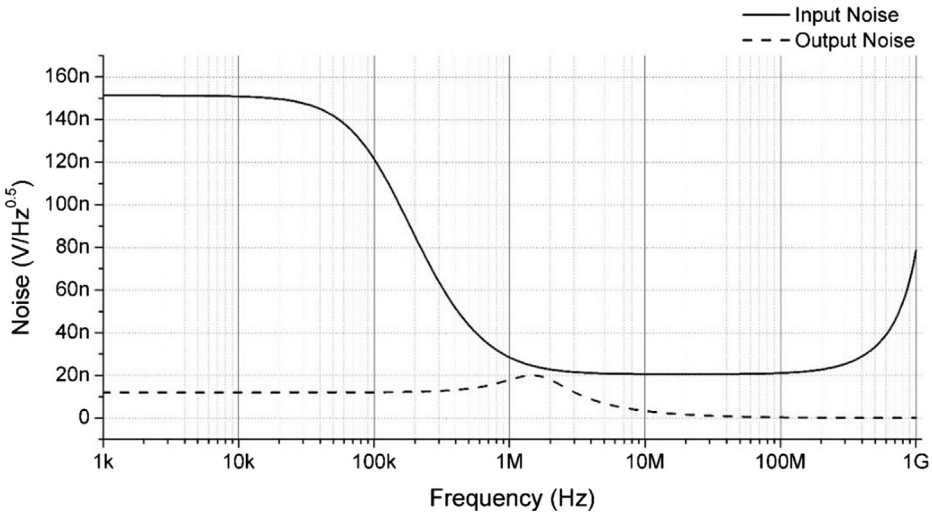

Fig. 20. Input and output noise variations of the AP filter response versus frequency.

Table 3
Comparisons of the proposed VM filter and the other related CCII based works [1–23] in open literature.

Reference #	# of active building blocks	# of input/ output terminals	# of capacitors		# of resistors		Universal	Orthogonally controllable	Technology	Supply voltages
			Grounded	*Floating*	*Grounded*	*Floating*				
[1] in Fig. 1	CCII (3)	1/5	2	0	4	2	Yes	Yes	AD844	NA
[2] in Fig. 1	CCII (4)	1/3	2	0	0	3	No	Yes	AD844	NA
[3] in Fig. 1	CCII (1)	3/2	0	2	1	2	Yes	No	0.35 μm	±1.65 V
[4] in Fig. 3a	CCII (1)	1/1	2	0	0	2	No	No	AD844	±9 V
[5] in Fig. 1	CCII (2)	4/1	1	1	0	3	Yes	Yes	AD844	NA
[6] in Fig. 1	CCII (2)	1/3	2	0	2	1	No	Yes	BJT	±5 V
[7] in Fig. 2.c	CCII (2)	1/1	1	1	1	1	No	No	EL2082	±5 V
[8] in Fig. 1	CCII (4)	1/3	3	0	5	0	No	Yes	NA	NA
[9] in Fig. 3	CCII (2)	1/3	2	0	1	2	No	No	0.13 μm	±0.75 V
[10] in Fig. 2	CCII (2)	3/1	1	1	1	2	Yes	Yes	AD844	NA
[11] in Fig. 1	CCII (3)	3/1	1	1	0	3	Yes	Yes	NA	NA
[12] in Fig. 1	CCII (3)	3/1	0	2	0	2	Yes	No	AD844	NA
[13] in Fig. 1	CCII (2)	3/1	0	2	0	2	Yes	No	AD844	±10 V
[14] in Fig. 2	CCII (4)	1/5	2	0	2	3	Yes	Yes	AD844	±15 V
[15] in Fig. 1	CCII (2)	3/1	1	1	0	3	Yes	No	NA	±15 V
[16] in Fig. 1	CCII (4)	1/5	2	0	1	4	Yes	Yes	AD844	±12 V
[17] in Fig. 1	CCII (3)	1/3	2	0	2	3	No	Yes	AD844	±12 V
[18] in Fig. 1	CCII (3)	3/2	1	1	2	1	Yes	No	AD844	±10 V
[19] in Fig. 1	CCII (7)	1/1	2	0	8	0	Yes	Yes	LF356N	NA
[20] in Fig. 1	CCII (2),VF (1)	3/1	1	1	1	2	Yes	Yes	NA	NA
[21] in Fig. 1	CCII (2)	3/1	1	1	1	2	Yes	Yes	AD844	NA
[22] in Fig. 1	CCII (3)	1/1	2	0	4	1	No	No	0.5 μm	±0.75 V
[23] in Fig. 1	CCII (3)	1/1	2	0	4	0	No	Yes	NA	NA
This work in Fig. 4	CCII (2)	3/1	1	1	1	2	Yes	Yes	0.13 μm	±0.75 V

NA: not available

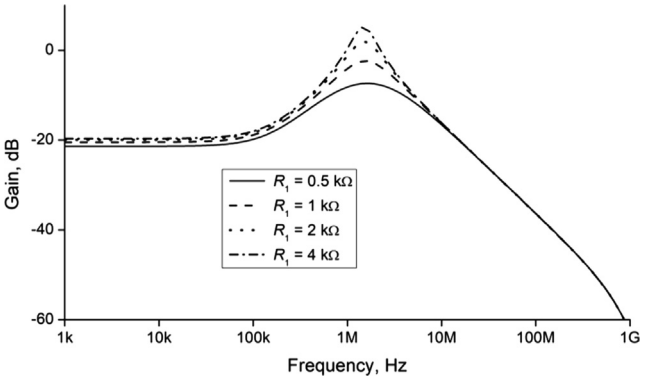

Fig. 21. Frequency domain analysis of the proposed filter.

$\cong$ 842 MHz and $f_\gamma \cong$ 730 MHz are evaluated through SPICE simulation program.

Passive elements of the proposed filter are chosen as $C_1 = C_2 = 100$ pF and $R_1 = R_2 = R_3 = 1$ kΩ (R_X is included), which yield a resonance frequency of $f_o \cong 1.59$ MHz. LP, BP and HP gain responses of the proposed VM universal filter against frequency are depicted in Fig. 9. Simulated and ideal results of the gains are close to themselves. NF gain and phase responses of the proposed filter versus frequency are depicted in Fig. 10 while AP filter gain and phase responses against frequency are demonstrated in Fig. 11. A sinusoidal input voltage signal with 100 mV peak-to-peak at 1.59 MHz is applied to the input of the proposed universal filter to obtain AP filter responses in time domain. The sinusoidal input and corresponding simulated and ideal output voltage signals are given in Fig. 12. Monte Carlo (MC) analyses with 50 runnings for 5% variations of all the resistors and capacitors in

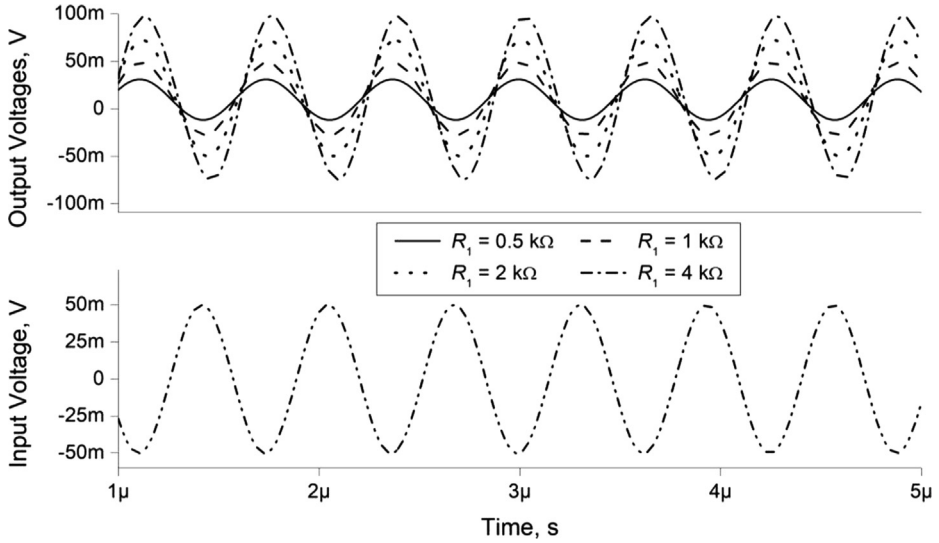

Fig. 22. Time domain analysis of the proposed filter.

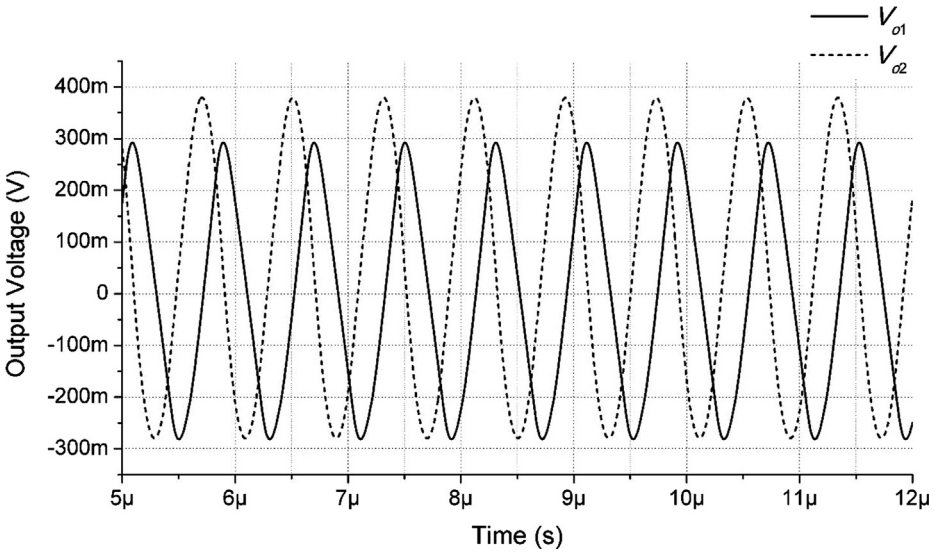

Fig. 23. Output voltages of the first proposed quadrature oscillator.

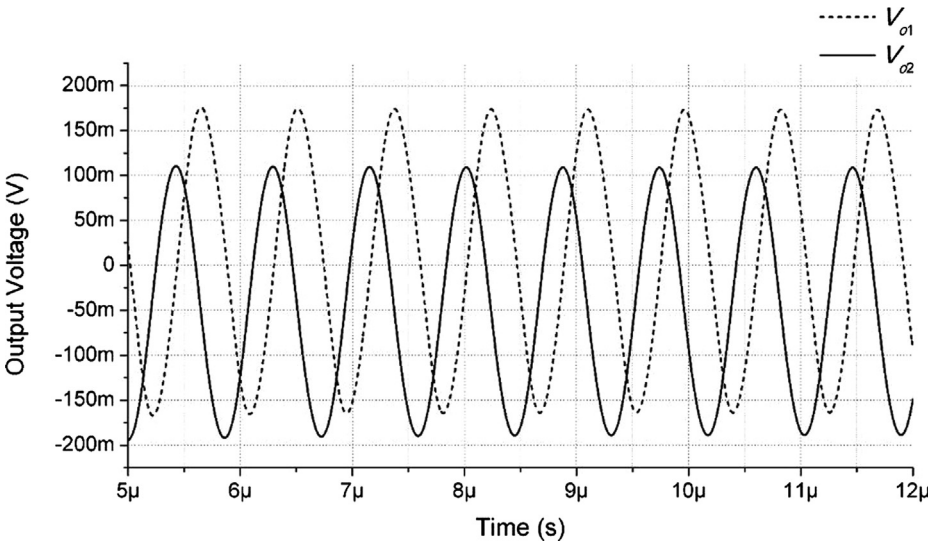

Fig. 24. Output voltages of the second proposed quadrature oscillator.

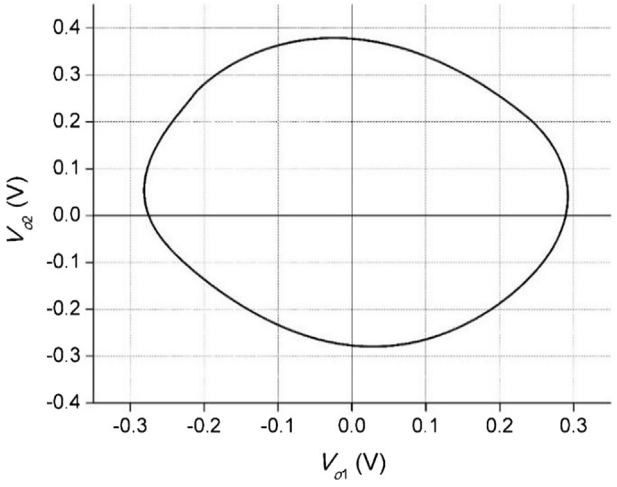

Fig. 25. Lissajous curve of the first proposed quadrature oscillator.

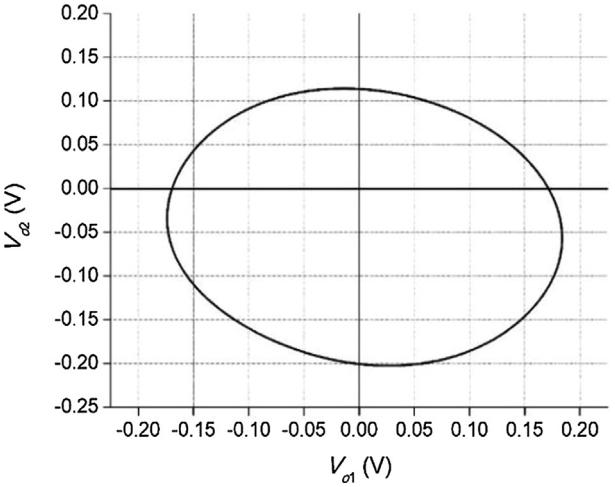

Fig. 26. Lissajous curve of the second proposed quadrature oscillator.

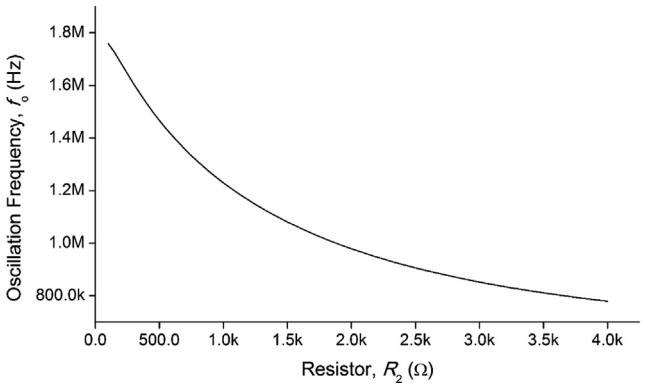

Fig. 27. Oscillation frequency variations versus R_2 for the first proposed oscillator.

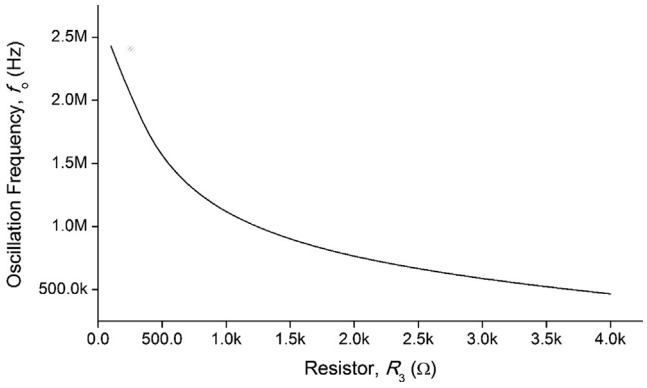

Fig. 28. Oscillation frequency variations versus R_3 for the second proposed oscillator.

uniform deviation are performed for the LP, HP, BP, NF and AP filter responses. Hence, the gain responses of the LP, BP and HP filters are drawn in Fig. 13 while gain and phase responses of the NF and AP filter versus frequency are demonstrated in Figs. 14 and 15, respectively.

Complete process, voltage supply and temperature (PVT) analyses are achieved to demonstrate the performance of the filter in Fig. 4. The PVT analyses for the LP, BP and HP filter gain responses with respect to frequency are performed by changing of the channel widths of the MOS transistors in Fig. 3, threshold voltages of the MOS transistors in Fig. 3, power supply voltages of the CCIIs in Fig. 4 and temperature of the filter in Fig. 4, which are given in Fig. 16. By a step size of 0.13 μm, the channel widths of the M_1 - M_8 in Fig. 3 are varied from 35.1 μm to 48.1 μm. Also, the channel widths of the M_{10} - M_{16} in Fig. 3 are varied from 6.5 μm

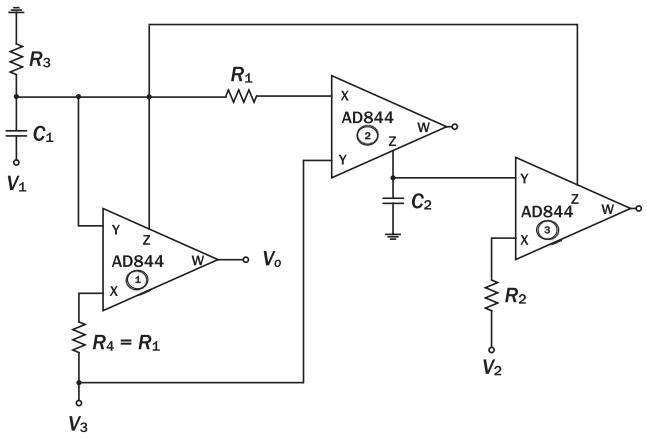

Fig. 29. Realization of the CCII based universal filter by using three AD844s.

Table 4
Comparisons for the proposed oscillators and the other related works [23,27–49] in open literature.

Reference #	ABB Type	# of ABBs	# of Resistors		# of Capacitors		Quadrature oscillator	f_o (Hz)	Single resistance control
			Grounded	*Floating*	*Grounded*	*Floating*			
[23] in Fig. 2	CCII+	3	4	0	2	0	Yes	10 k	Yes
[27] in Fig. 1	CCII±	3	4	0	2	0	Yes	65 k	Yes
[28] in Fig. 4b	CCII±	3	4	0	2	0	Yes	153.8 k	Yes
[29] in Fig. 3c	GC	4	2	2	2	0	Yes	1.59 M	Yes
[30] in Fig. 1a	CCII+	3	4	0	2	0	Yes	1.51 M	Yes
[31] in Fig. 5b	CCII+	2	3	1	1	1	No	15.8 k	Yes
[32] in Fig. 3b	CCII+	1	1	2	2	0	No	39.08 k	No
[33] in Fig. 4a	CCII+	2	3	1	2	0	No	NA	No
[34] in Fig. 2c	CCII-, ICCII-	2	1	1	1	1	No	NA	No
[35] in Fig. 5a	CCII	2	3	0	2	0	Yes	159.15 k	Yes
[36] in Fig. 5b	CCII±	4	5	0	2	0	Yes	NA	Yes
[37] in Fig. 1	CCII- and VF	2	1	2	2	0	No	5 k	Yes
[38] in Fig. 1	CCII + and CCI-	3	3	0	2	0	Yes	6 k-18 k	Yes
[39] in Fig. 5X	CCII+	1	1	2	1	1	No	20 k-200 k	Yes
[40] in Fig. 1	CCII- and CCI+	2	3	0	2	0	Yes	12.5 k-40 k	Yes
[41] in Fig. 3	CCII+	3	2	1	2	0	Yes	20 k-10 M	Yes
[42] in Fig. 2a	CCII+	1	1	1	1	1	No	NA	No
[43] in Fig. 4	CCII + and VF	4	3	1	2	0	No	189.4 k	Yes
[44] in Fig. 3a	CCII±	2	1	1	2	0	No	5 k-45 k	No
[45] in Fig. 5b	CCII+	3	3	0	3	0	Yes	4.19 k	Yes
[46] in Fig. 6	CCII	2	1	2	2	0	Yes	2.33 M	Yes
[46] in Fig. 7	MCCII- and CCII-	2	1	2	2	0	Yes	1.41 M	Yes
[47] in Fig. 1	CCII+	2	1	1	2	0	No	7 k-35 k	No
[48] in Fig. 3	CCII	2	1	1	2	0	Yes	1284 k	No
[49] in Fig. 2	CCII + and OTA	2	2	0	2	0	No	NA	NA
This work in Fig. 5	CCII	2	2	1	2	0	Yes	1240 k	Yes
This work in Fig. 6	CCII+	3	2	1	2	0	Yes	1140 k	Yes

NA: not available.

to 19.5 μm while one of M_9 is varied from 123.5 μm to 136.5 μm. The threshold voltages of all the MOS transistors with a MC analysis with 50 runnings for 5% variations in uniform deviation are changed in Fig. 16. By a step size of 0.05 V, the supply voltages of the CCIIs in Fig. 4 are changed from ± 0.6 V to ± 0.9 V. By a step size of 25 °C, the operating temperatures are changed from −25 °C to 75 °C. As it is shown in Fig. 16, a significant difference between ideal and simulation responses is not seen. Likewise, a PVT analysis for the gain and phase responses of AP filter with respect to frequency is achieved as an example by changing of the channel widths of the MOS transistors, threshold voltages of the MOS transistors, power supply voltages of the CCIIs and temperature of the filter, which are given in Fig. 17. A significant difference between ideal and simulation responses is not observed as it is shown in Fig. 17.

For the AP filter, total harmonic distortion (THD) variations are drawn in Fig. 18 in which sinusoidal input voltage signals from 200 μV peak to 60 mV peak at 1.59 MHz are applied to the corresponding inputs. The proposed filter has low THD values which are less than 3% from 200 μV peak to 50 mV peak sinusoidal input voltage signals. The input and output noise variations of the BP and AP filters against frequency are respectively shown in Figs. 19 and 20. It is seen from Figs. 19 and 20 that the input and output noises are adequately low values.

Power dissipation of the proposed filter is calculated as 4.15 mW through SPICE simulation program. The proposed VM filter is compared with the other related CCII based works [1–23] in Table 3.

Passive elements of the proposed filter shown in Fig. 4 are chosen as $C_1 = C_2 = 100$ pF and $R_2 = R_3 = 1$ kΩ (R_X is included), which yield a resonance frequency of $f_o \cong 1.59$ MHz. Moreover, for different values of the resistor, R_1, 0.5 kΩ, 1 kΩ, 2 kΩ and 4 kΩ, corresponding Q is obtained as 0.5, 1, 2 and 4, respectively. Frequency and time domain analysis results for the proposed filter are respectively given in Figs. 21 and 22.

Output voltages of the first QO in Fig. 5 are drawn in Fig. 23 where $R_1 = R_2 = 1$ kΩ (R_X is included), $R_3 = 1.45$ kΩ and $C_1 = C_2 = 100$ pF are chosen. Thus, OF is approximately found as 1.24 MHz through SPICE simulation. Likewise, output voltages of the second one are plotted in Fig. 24 where $R_1 = R_3 = 1$ kΩ (R_X is included), $R_2 = 1.52$ kΩ and $C_1 = C_2 = 100$ pF are chosen. Hence, OF is nearly found as 1.14 MHz through SPICE simulation. It is seen from Figs. 23 and 24 that the difference between phase angles of the V_{o1} and V_{o2} signals is approximately 90°. Lissajous curves for the proposed QOs are given in Figs. 25 and 26, respectively.

The variation of OF versus R_2 for the first proposed QO is drawn in Fig. 27. Likewise, the variation of OF against R_3 for the second proposed QO is depicted in Fig. 28. In both SPICE simulations given in Figs. 27 and 28, the resistor values are R_2 and R_3 separately changed from 100 Ω to 4 kΩ by a step size of 50 Ω.

It is seen from Figs. 27 and 28 that OF decreases as the resistor values of R_2 and R_3 increase.

THD values of the first proposed QO are calculated as 7.7% for output V_{o1} and 5.3% for output V_{o2} at OF of 1.24 MHz through SPICE simulations. For the second proposed QO, THD values are found as 2.9% for output V_{o1} and 1.5% for output V_{o2} at OF of 1.14 MHz through SPICE simulations. The first and second proposed QO circuits respectively consume 5.03 mW and 6.33 mW powers, which are found via SPICE simulations. Also, the comparison table in Table 4 is given to compare the proposed QOs and the other related studies [23,27–49].

7. Experimental results

For experiments, the CCII based universal filter given in Fig. 4 is implemented by using AD844s [54] as demonstrated in Fig. 29.

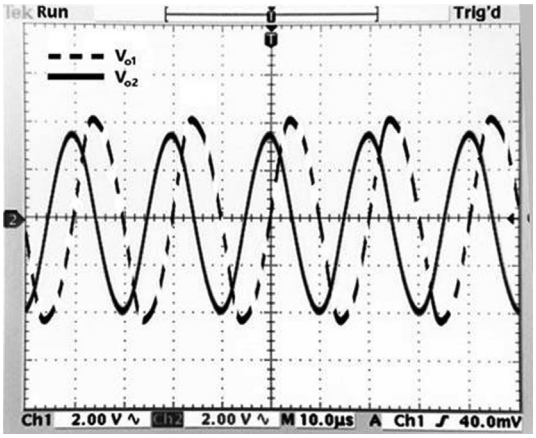

Fig. 31. Output voltages of the second proposed quadrature oscillator in experiment.

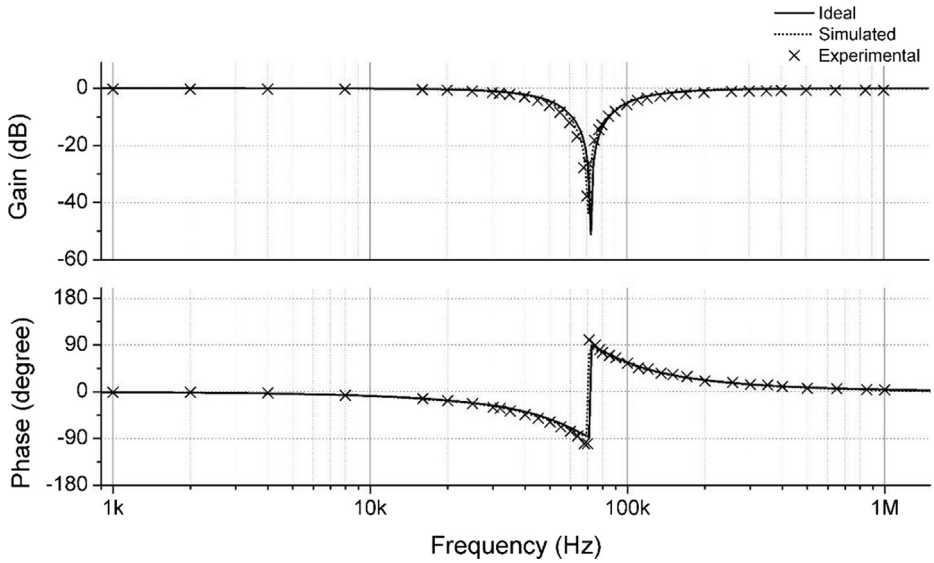

Fig. 30. Ideal, simulated and experimental gain as well as phase responses for the notch filter with respect to frequency.

Therefore, the proposed VM universal filter consists of three AD844s, four resistors and two capacitors. If $R_4 = R_2$ is chosen, the output voltage of the developed filter in Fig. 29 can be expressed as given in Eq. (4). The passive elements $R_1 = R_2 = R_3 = R_4 = 2.2$ kΩ and $C_1 = C_2 = 1$ nF resulting in $f_o \cong 72.34$ kHz and $Q = 1$ as well as the supply voltages $V_{CC} = -V_{EE} = 6$ V are chosen in Fig. 29. Ideal, simulated and experimental gain as well as phase responses for NF versus frequency are given in Fig. 30 as an example.

Similarly, to perform an experiment, one AD844 is replaced instead of each CCII+ of the second proposed QO given in Fig. 6 where passive elements $R_1 = R_3 = 2.2$ kΩ, $R_2 = 3.2$ kΩ and $C_1 = C_2 = 1$ nF resulting in $f_o \cong 50$ kHz and the power supply voltages $V_{CC} = -V_{EE} = 6$ V are chosen. Therefore, V_{o1} and V_{o2} output voltage signals on the oscilloscope screen are given in Fig. 31.

8. Conclusion

A CCII based VM universal biquadratic filter with one output and three inputs as well as two CCII based QOs are proposed in this work. The proposed VM filter can realize all the standard universal filter TFs such as LP, BP, HP, NF and AP ones. It has the feature of orthogonal control of Q and ω_o but it needs a single resistive matching condition for only AP filter response. Both of the proposed QOs can be controlled by a single grounded resistor. SPICE simulation and experimental results confirm the claimed theory well as desired but the unimportant discrepancy among ideal, simulation and experimental results arises from non-idealities of the CCIIs and AD844s.

Declaration of Competing Interest

The authors declare that they have no known competing financial interests or personal relationships that could have appeared to influence the work reported in this paper.

References

[1] Horng J-W, Hou C-L, Chang C-M, Chung W-Y, Wei H-Y. Voltage-mode universal biquadratic filters with one input and five outputs using MOCCIIs. Comput Electr Eng 2005;31:190–202.
[2] Chang C-M. Multifunction biquadratic filters using current conveyors. IEEE Trans Circuits Syst-II: Analog Digital Signal Process 1997;44(11):956–8.
[3] Chen H-P. Single CCII-based voltage-mode universal filter. Analog Integr Circ Sig Process 2010;62:259–62.
[4] Soliman AM. Generation of current conveyor based lowpass filters from a passive RLC filter. J Franklin Institute 1998;335B(7):1283–97.
[5] Chang C-M, Tu S-H. Universal voltage-mode filter with four inputs and one output using two CCII+s. Int J Electron 1999;86(3):305–9.
[6] Chang C-M, Lee M-J. Voltage-mode multifunction filter with single input and three outputs using two compound current conveyors. IEEE Trans Circuits Systems-I: Fundamental Theor Appl 1999;46(11):1364–5.
[7] Sotner R, Jerabek J, Sevcik B, Dostal T, Vrba K. Novel solution of notch/all-pass filter with special electronic adjusting of attenuation in the stop band. Elektronika Ir Elektrotechnika 2011;7(113):37–42.
[8] Horng J-W, Lay J-R, Chang C-W, Lee M-H. High input impedance voltage-mode multifunction filters using plus-type CCIIs. Electron Lett 1997;33(6):472–3.
[9] Yucel F, Yuce E. A new CCII based voltage-mode multifunctional filter with reduced number of active and passive elements. J Circuits Syst Comput 2015;24(4).
[10] Liu S-I, Lee J-L. Voltage-mode universal filters using two current conveyors. Int J Electron 1997;82(2):145–9.
[11] Ozoguz S, Gunes EO. Universal filter with three inputs using CCII+. Electron Lett 1996;32(23):2134–5.
[12] Horng J-W. High-input impedance voltage-mode universal biquadratic filter using three plus-type CCIIs. IEEE Trans Circuits Syst-II: Analog Digital Signal Process 2001;48(10):996–7.
[13] Horng J-W, Lee M-H, Cheng H-C, Chang C-W. New CCII-based voltage-mode universal biquadratic filter. Int J Electron 1997;82(2):151–5.
[14] Horng J-W, Chiu W-Y. High input impedance voltage-mode biquad with one input and five outputs employing four CCII ICs. Indian J Pure Appl Phys 2016;54:577–82.
[15] Ozoguz S, Tarim N, Acar C, Kuntman H. A new voltage-mode universal filter based on a lossy inductor simulation. In: 9th Mediterranean Electrotechnical Conference (MELECON 98). p. 595–8.
[16] Horng J-W, Hou C-L, Chang C-M, Chung W-Y. Voltage-mode universal biquadratic filters with one input and five outputs. Analog Integr Circ Sig Process 2006;47:73–83.
[17] Horng J-W, Wang Z-R, Liu C-C. Voltage-mode lowpass, bandpass, and notch filters using three plus-type CCIIs. Circuits Syst 2011;2:34–7.
[18] Horng J-W. High input impedance voltage-mode universal biquadratic filters with three inputs using plus-type CCIIs. Int J Electron 2004;91(8):465–75.
[19] Higashimura M, Fukui Y. Universal filter using plus-type CCIIs. Electron Lett 1996;32(9):810–1.
[20] Chang C-M, Lee M-S. Comment: universal voltage-mode filter with three inputs and one output using three current conveyors and one voltage follower. Electron Lett 1995;31(5):353.
[21] Horng J-W, Tsai C-C, Lee M-H. Novel universal voltage-mode biquad filter with three inputs and one output using only two current conveyors. Int J Electron 1996;80(4):543–6.
[22] Sharma S, Rajput SS, Pal K, Mangotra LK, Jamuar SS. Low-voltage CCII based all-pass/notch filter. Indian J Pure Appl Phys 2006;44:871–4.
[23] Minhaj N. Current conveyor-based voltage-mode two-phase and four-phase quadrature oscillators. Int J Electron 2007;94(7):663–9.
[24] Yuce E, Minaei S. Universal current-mode filters and parasitic impedance effects on the filter performances. Int J Circuit Theory Appl 2008;36(2):161–71.
[25] Chunhua W, Keskin AU, Yang L, Qiujing Z, Sichun D. Minimum configuration insensitive multifunctional current-mode biquad using current conveyors and all-grounded passive components. Radioengineering 2010;19(1):178–84.
[26] Keskin AU, Cam U. Insensitive high-output impedance minimum configuration SITO-type current-mode biquad using dual-output current conveyors and grounded passive components. Int J Electron Commun (AEÜ) 2007;61(5):341–4.
[27] Cam U, Kuntman H. A new CCII-based sinusoidal oscillator providing fully independent control of oscillation condition and frequency. Microelectron J 1998;29(11):913–9.
[28] Soliman AM. Synthesis of grounded capacitor and grounded resistor oscillators. J Franklin Inst 1999;336(4):735–46.
[29] Soliman AM. On the generation of CCII and ICCII oscillators from three op amps oscillator. Microelectron J 2010;41(10):680–7.
[30] Abuelma'atti MT, Al-Daghrier H. New single-element-controlled sinusoidal oscillators employing CCII+. Microelectron J 1998;29(3):83–6.
[31] Soliman AM. Current-mode oscillators using single output current conveyors. Microelectron J 1998;29(11):907–12.
[32] Soliman AM, Elwakil AS. Wien oscillators using current conveyors. Comput Electr Eng 1999;25(1):45–55.
[33] Soliman AM. Generation of CCII and ICCII based Wien oscillators using nodal admittance matrix expansion. Int J Electron Commun (AEÜ) 2010;64(10):971–7.
[34] Soliman AM. Generation of three oscillator families using CCII and ICCII. Int J Electron Commun (AEÜ) 2010;64(9):880–7.
[35] Soliman AM. Current mode CCII oscillators using grounded capacitors and resistors. Int J Circuit Theory Appl 1998;26(5):431–8.
[36] Soliman AM. Pathological representation of the two-output CCII and ICCII family and application. Int J Circuit Theory Appl 2011;39(6):589–606.
[37] Bhaskar DR, Senani R. New current-conveyor-based single-resistance-controlled/voltage-controlled oscillator employing grounded capacitors. Electron Lett 1993;29(7):612–4.
[38] Chang C-M. Novel current-conveyor-based single-resistance-controlled/voltage-controlled oscillator employing grounded resistors and capacitors. Electron Lett 1994;30(3):181–3.
[39] Celma S, Martinez PA, Carlosena A. Approach to the synthesis of canonic RC-active oscillators using CCII. IEE Proc-G Circuits Devices Syst 1994;141(6):493–7.
[40] Liu S-I. Single-resistance-controlled/voltage-controlled oscillator using current conveyors and grounded capacitors. Electron Lett 1995;31(5):337–8.
[41] Martinez PA, Sabadell J, Aldea C, Celma S. Variable frequency sinusoidal oscillators based on CCII+. IEEE Trans Circuits Systems-I: Fundamental Theor Appl 1999;46(11):1386–90.
[42] Abuelma'atti MT. Two minimum component CCII-based RC oscillators. IEEE Trans Circuits Syst 1987;CAS-34(8):980–1.
[43] Khan AA, Bimal S, Dey KK, Roy SS. Novel RC sinusoidal oscillator using second-generation current conveyor. IEEE Trans Instrum Meas 2005;54(6):2402–6.
[44] Horng J-W, Chang C-W, Lee M-H. Single-element-controlled sinusoidal oscillators using CCIIs. Int J Electron 1997;83(6):831–6.
[45] Abuelma'atti MT. New sinusoidal oscillators with fully uncoupled control of oscillation frequency and condition using three CCII+s. Analog Integr Circuits Signal Process 2000;24(3):253–-261.
[46] Yucel F, Yuce E. CCII based more tunable voltage-mode all-pass filters and their quadrature oscillator applications. Int J Electron Commun (AEÜ) 2014;68(1):1–9.
[47] Horng J-W. A sinusoidal oscillator using current-controlled current conveyors. Int J Electron 2001;88(6):659–64.
[48] Yuce E. DO-CCII/DO-DVCC based electronically fine tunable quadrature oscillators. J Circuits Syst Comput 2017;26(2).

[49] Abuelma'atti MT. New current-controlled ccii-based RC oscillators with grounded capacitors and resistors. Int J Circuit Theor Appl 1993;21(5):487–91.
[50] Fabre A, Saaid O, Wiest F, Boucheron C. High frequency applications based on a new current controlled conveyor. IEEE Trans Circuits Syst I: Fundam Theor Appl 1996;43(2):82–91.
[51] Surakampontorn W, Riewruja V, Kumwachara K, Dejhan K. Accurate CMOS based current conveyors. IEEE Trans Instrum Measure 1991;40(4):699–702.
[52] Yuce E, Tokat S, Minaei S, Cicekoglu O. Stability problems in universal current-mode filters. Int J Electron Commun (AEÜ) 2007;61(9):580–8.
[53] Yuce E. A single-input multiple-output voltage-mode second-order universal filter using only grounded passive components. Ind J Eng Mater Sci 2017;24(2):97–106.
[54] Analog Devices, AD844 Datasheet (Rev. G), https://www.analog.com/media/en/ technical-documentation/data-sheets/AD844.pdf, Accessed in October 2017.