Design of a Broadband Microwave Amplifier Using Fuzzy Logic Performance Data Sheets with a Artificial Immune System

Yavuz Cengiz[1], **Fırat Yücel**[2], **and Filiz Güneş**[3]

[1]Department of Electronics and Communication Engineering,
Süleyman Demirel University, Isparta, Turkey
[2]International Computing Institute, Ege University, İzmir, Turkey
[3]Department of Electronics and Communication Engineering,
Yıldız Technical University, Istanbul, Turkey

Abstract— Optimization is one of the fundamental processes frequently encountered in the engineering problems and is highly nonlinear in terms of the descriptive parameters of the system. In this work, the fuzzy logic performance data sheets of the transistor are employed to determine the feasible design target space in the optimization of a microwave amplifier. The potential gain characteristics with the associated source $Z_S(\omega)$ and load $Z_L(\omega)$ terminations functions are utilized combined with the artificial immune data processing in the design of the microwave amplifiers. A typical example is given and its resulted performance ingredients are compared with the design targets.

1. INTRODUCTION

Optimization is one of the fundamental processes frequently encountered in the engineering problems and is highly nonlinear in terms of the descriptive parameters of the system. Nowadays, microwave amplifier design is doubtlessly one of the major interests of microwave engineering. Considering all the stringent requirements which include high gain, low input VSWR together with the low-power consumption from the low- battery, the wideband miniature LNA design is one of the biggest challenges to UWB transceiver integrations. An optimization process generally contains two fundamental problems: (i) The first is to form a feasible Design Space which is defined in terms of the design variables and targets; (ii) The second is that the global minimum of the error (objective) function governing the optimization must be obtained with respect to the design variables within the feasible design space.

For optimization of a microwave amplifier, design variables are generally the matching circuit parameters whose lower and upper limits are very often determined by the technology to be utilized in the realization stage of the design. Certainly, within the optimization process one can easily embed the desired performance goals without knowing the physical limits and/or compromise relations among F, V_i and G_T appropriately. Unfortunately this process often fails to attain the desired goals. However, the Fuzzy Performance Data Sheets (FPDS) of the transistor overcomes all the above — mentioned handicaps and embeds the compatible (F, V_i, G_T) triplets with their source (Z_S) and load (Z_L) terminations together over a predetermined frequency band of operation. Thus, combining this performance characterisation with the Fuzzy Logic model of the device [1, 2], the compatible (Noise Figure F, Input VSWR V_i, Gain G_T) triplets together with their source Z_S, and load Z_L terminations can be obtained as the functions of the operation variables V_{DS}, I_{DS}, f of the device (Fig. 1).

2. MICROSTRIP AMPLIFIER

Block Diagramme of the microwave amplifier is given in the Fig. 2(a), where the input matching (IMC) and output matching circuits (OMC) are lossless and reciprocal, which are designed by the elements of distributed or lumped parameters in the various configurations. In these matching circuits, two types of distibuted element are employed: (i) The series line (ii) The shunt type of shorted line.

Circuit analysis is based upon the modular structure using either $ABCD$ or wave-amplitude transmission parameters. So the $ABCD$ parameter matrices of the series and shunt line can be given, respectively as follows:

$$A = \cos\beta l, \quad B = jZ_0 \sin\beta l, \quad C = j\sin\beta l/Z_0, \quad D = \cos\beta l \tag{1.1}$$

$$A = 1, \quad B = 0, \quad C = -j/Z_0 \mathrm{tg}\beta l, \quad D = 1 \tag{1.2}$$

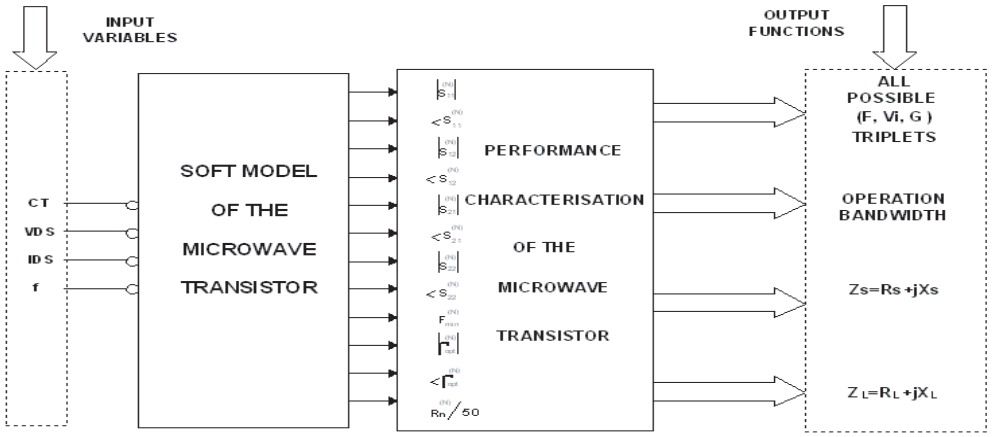

Figure 1: A block diagram for the compatible performance triplets of a microwave transistor.

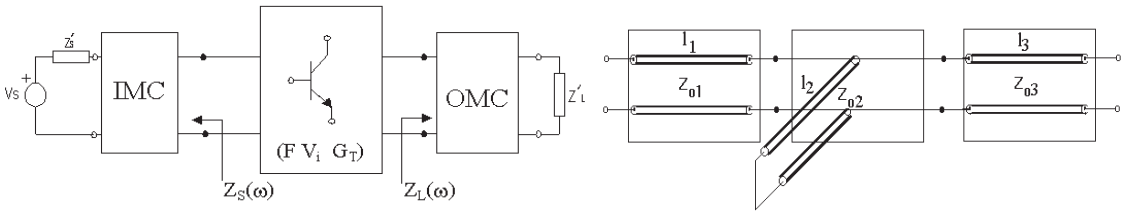

(a) (b)

Figure 2: (a) The two-port representation of a single-transistor microwave amplifiers. (b) T-type matching circuit structure used in the amplifier.

Similarly, wave-amplitude transmission matrices of the series and shunt lines can be expressed.

Scattering and noise parameters of the transistor are approximated by a simple neural network having one hidden layer using the manufacturer's supplied data [3]. The total $ABCD$ or wave-amplitude transmission matrix of the network can be obtained by multiplying each respective matrix; the circuit functions employed in the objective functions can be expressed in either the transfer of port impedance forms in terms of the network parameters. So the transducer power gain of a two-port in term of $ABCD$ parameters can be given as

$$G_T = \frac{4R_S R_L}{P} \tag{2.1}$$

where

$$P = |AZ_L + B + Z_S(CZ_L + D)|^2 \tag{2.2}$$

with $R_S = \mathrm{Re}\{Z_S\},\ R_L = \mathrm{Re}\{Z_L\}$, and Z_S and Z_L are the complex source and load impedances respectively. The noise performance measure function can be expressed as follows:

$$F = \frac{(S/N)_i}{(S/N)_o} = F\{R_S, X_S\} = F_{\min} + \frac{R_N}{|Z_{opt}|^2}\frac{|Z_S - Z_{opt}|^2}{R_S} \tag{3.1}$$

which can be reexpressed in terms of loss of the input matching circuit terminated by Z^*_{opt}, $1/G_{TF}$ as

$$F = F_{\min} + \frac{4R_N R_{OPT}}{|Z_{opt}|^2}\left(\frac{1}{G_{TF}} - 1\right) \tag{3.2}$$

So, the non-negative inequality noise constraint can be written as

$$E_N = 1 + \frac{F_{ref} - F_{\min}}{4R_N R_{opt}}|Z_{opt}|^2 - \frac{1}{G_{TFC}} > 0 \tag{3.3}$$

where $1/G_{TFC}$ is the calculated loss of the input matching circuit terminated by Z^*_{opt}.

The input VSWR is defined at the generator port as the measure of the mismatching of the input impedance with respect to the source impedance

$$V_i = \frac{1+|\rho_i|}{1-|\rho_i|}, \qquad \rho_i = \frac{Zi - Z_s^*}{Zi + Z_s} \tag{4}$$

Here we define a logarithmic inequality constrain function as follows

$$E_{vi} = \log_{10}|\rho_{iref}|^2 - \log_{10}|\rho_{ic}|^2 > 0 \tag{5}$$

3. ARTIFICIAL IMMUNE SYSTEMS

Drawing inspiration from the vertebrate immune system, a new research field of Artificial Immune Systems (AIS) is springing up. The vertebrate immune system is a rich source of theories and acts as an inspiration for computer-based solutions. Over the last few years there has been an increasing interest in the area of artificial immune system [4]. AIS uses ideas gleaned from immunology in order to develop systems capable of performing tasks in various engineering applications [5]. Artificial Immune Systems have come on the scene in the 1990s as a new system consolidating a number of biologically-based calculating methods such as Artificial Neural Networks and Artificial Life [6, 7].

The artificial immune system has been formed on the basis of the working principles of the natural immune system found in the human body. Tissues and organs related with the natural immune system in the body are the thymus gland, the bone marrow, the lymph nodes, the spleen and the tonsils. A central organ coordinating the functions of the associated tissue, the organ, the molecule and the cells does not exist in the immune system. The immune system, via its special cells, recognizes the foreign (external) cells filtering through the body and neutralizes them. The basic immunity cell is the lymphocyte [8]. The lymphocytes are grouped into two categories: "T" and "B" cells. The "B" cells can recognize the antigens without restraint in liquid solutions whereas the "T" cells need the recognition of antigens by means of other assisting cells [9]. A natural immune response is given simply as follows: When an external molecule enters the body, the special molecules (macrophages) surround that external molecule and get other immunity cells to notice it. When the assisting "T" cells notice the special cells, they forewarn the white blood cells and these cells become larger in number. The "B" cells begin to produce chemical substances called antibodies; the antibodies combining with the antigens exterminate the antigens with ease. The exterminating "T" cells alerted by the assisting "T" cells make it possible for the antigen to be exterminated. The body needs to be able to distinguish between its own cells and external cells plus molecules (antigens) in order for the natural immune system cells to carry out the activities defined above. The cells belonging to the body itself are called the "self" cells and the external cells are called the "non-self" cells. It is important to keep the "self" cells unharmed in the course of exterminating the "non-self" cells.

These problem-solving methods that are used in artificial immune systems thoroughly imitate the mechanisms found in the natural immune system that the human body possesses. We used a Clonal Selection algorithm (CLONALG) to solve the optimization problem at this study.

4. COMPUTED RESULTS

NE329S01 is biased at $I_C = 5\,\mathrm{mA}$ and $V_{CE} = 10\,\mathrm{V}$, for which the termination functions $Z_S(\omega_i)$, $Z_L(\omega_i)$ for $F_{req}(\omega_i) = 0.46\,\mathrm{dB}$, $V_{ireq}(\omega_i) = 1.0$, $G_{Treq}(\omega_i)) = 12\,\mathrm{dB}$, $i = 2, \ldots 11$ are supplied into the optimization process as the target values over the operation bandwidth. These target values are the physically realizable $Z_S(\omega_i) = R_S(\omega_i) + jX_S\omega_i)$; $Z_L(\omega_i) = R_L(\omega) + jX_L(\omega_i)$, $i = 2, \ldots 11$ termination solutions to the simultaneous nonlinear equations of $F\ (R_S,\ X_S) = F_{req}$, $V_i(R_S,\ X_S,\ R_L,\ X_L) = V_{ireq}$, $G_T = (R_S,\ X_S,\ R_L,\ X_L) = G_{Treq}$ for the transistor. Since the optimization process also find out the approximately solution set to the same equations in terms of the predetermined variables, so the resulted values will no longer be equal to the target values, but will be values nearly to the target values, ruled by the objective function and its data processing method. So Figs. 3(a), 3(b) and 3(c) give the resulted $G_T(\omega)$, $F(\omega)$, $V_i(\omega)$-frequency variations. Bandwidth of amplifier is between 2 GHz and 11 GHz.

T-type matching circuit parameters for NE329S01 transistor are found as follows:

$\ell_1 = 14.99\,\mathrm{cm}$, $\ell_2 = 1.23\,\mathrm{cm}$, $\ell_3 = 0.32\,\mathrm{cm}$, $Z_{o1} = 5\,\Omega$, $Z_{o2} = 150\,\Omega$, $Z_{o3} = 89.78\,\Omega$;
$\ell_4 = 13.76\,\mathrm{cm}$, $\ell_5 = 0.69\,\mathrm{cm}$, $\ell_6 = 1.02\,\mathrm{cm}$, $Z_{o4} = 135.8\,\Omega$, $Z_{o5} = 148.8\,\Omega$, $Z_{o6} = 88.25\,\Omega$

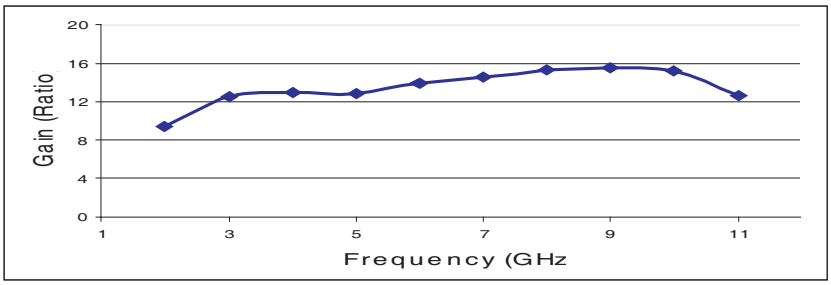

(a)

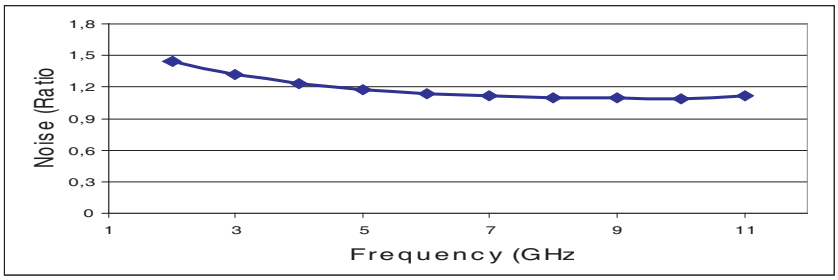

(b)

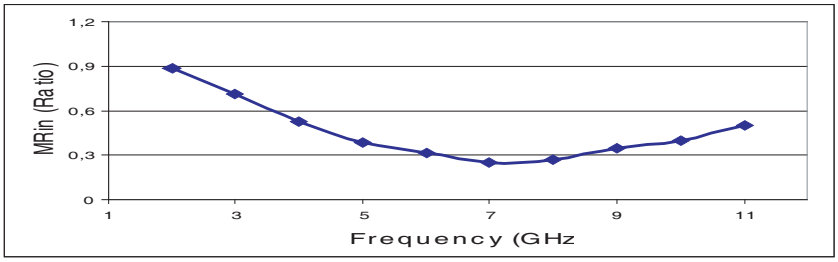

(c)

Figure 3: (a) G_T (ratio) variation of the microwave amplifier (G_{Treq} (ratio) = 15.85; V_{ireq} (ratio) = 1.0; F_{req} (ratio) = 1.11). (b) Noise(ratio) variation of the microwave amplifier (G_{Treq} (ratio) = 15.85; V_{ireq} (ratio) = 1.0; F_{req} (ratio) = 1.11). (c) Input reflection coefficient variation of the microwave amplifier (G_{Treq} (ratio) = 15.85; V_{ireq} (ratio) = 1.0; F_{req} (ratio) = 1.11).

5. CONCLUSIONS

Quality of the microwave amplifier performance can be determined by the flat gain level as well as the percent of the maximum power delivered into the input port, which is characterized by the module square of the input reflection coefficient, over the operation bandwidth. Noise figure is also important performance ingredient depending on the position of the amplifier in system order. So this work may have the following originalities:

Gain, Input VSWR and Noise Figure are taken into account simultaneously over a pre-determined operation bandwidth in a Multi- Objective Error Function;

Manufacturers Data Sheets of the transistor utilized are replaced by the Fuzzy Performance Data Sheets to determine the Feasible Design Space;

Novel Soft Computing Methods of Fuzzy Logic, Artificial Immune Algorithm are utilized;

The Resulted Design Space can be utilized efficiently in the realization by the MMIC (Monolithic Microwave Integrated Circuit) technology.

REFERENCES

1. Güneş, F., H. Torpi, and F. Gürgen, "A multidimensional signal-noise neural network model for microwave transistors," *IEE Proceedings — Circuits Devices and Systems*, Vol. 145, No. 2, 111–117, April 1998.

2. Güneş, F., N. Türker, and F. Gürgen, "Signal-noise support vector model of a microwave transistor," *Int. J. of RF and Microwave CAE*, Vol. 17, No. 4, 404–415, July 2007.
3. Güneş, F., H. Torpi, and F. Gürgen, "A multidimensional signal-noise neural network model for microwave transistor," *IEE Proceedings — Circuits Devices and Systems*, Vol. 145, No. 2, 111-7, 1998.
4. Zhang, L., Y. Zhong, and P. Li, "Applications of artificial immune systems in remote sensing image classification," *Proc. 20th Congress. Int. Soc. for Photogrammetry and Remote Sensing*, 2004.
5. De Castro, L. N. and F. J. Von Zuben, "Learning and optimization using the clonal selection principle," *IEEE Transactions on Evolutionary Computation, Special Issue on Artificial Immune Systems*, Vol. 6, No. 3, 239–251, 2002.
6. Engin, O. and A. Döyen, "Artificial immune systems and applications in industrial problems," *G.U. Journal of Science*, Vol. 17, No. 1, 71–84, 2004.
7. Nasaroui, O., D. Dasgupta, and F. Gonzales, "The promise and challenges of artificial immune system based web usage mining: Preliminary results," *Workshop on Web Analytics at Second SIAM International Conference on Data mining(SDM)*, Arlington, VA, April 11–13, 2002.
8. Trojanowski, K. and S. T. Wierzchon, "Searching for memory in artificial immune system," *The Elevent International Symposium on Intelligent Information Systems*, June 3–6, 2002.
9. De Castro, L. N. and J. Timmis, "A novel approach to pattern recognition," *Artificial Neural Networks in Pattern Recognition*, L. Alonso, J. Corchado, and Fyfe, Editors, 67–84, University of Paisley, 2002.