Int. J. Electron. Commun. (AEÜ) 79 (2017) 116–123

Contents lists available at ScienceDirect

International Journal of Electronics and Communications (AEÜ)

journal homepage: www.elsevier.com/locate/aeue

Regular paper

Grounded capacitor based fully cascadable electronically tunable current-mode universal filter

Firat Yucel [a], Erkan Yuce [b,*]

[a] Akdeniz University, Department of Informatics, 07059, Konyaalti, Antalya, Turkey
[b] Pamukkale University, Department of Electrical and Electronics Engineering, 20160, Kinikli, Denizli, Turkey

ARTICLE INFO

Article history:
Received 25 April 2017
Accepted 28 May 2017

Keywords:
Universal filter
Current-mode
CCII+
CCCII+
Tunability
Orthogonality

ABSTRACT

A novel current-mode (CM) universal filter configuration composed of five plus-type second-generation current conveyors (CCII+s) as active components besides three resistors and three grounded capacitors as passive elements is proposed in this paper. The proposed filter can simultaneously provide high-pass, band-pass and low-pass responses. Also, it can realize all-pass and notch responses with interconnection of convenient output currents. It can be cascaded with other CM ones easily because it has low input and high output impedances. It offers orthogonal control of angular resonance frequency and quality factor. An electronically tunable universal filter can be easily obtained if plus-type current controlled current conveyors are replaced instead of each of the five CCII+s and all the three resistors are removed. Nevertheless, it needs a single passive element matching constraint for notch and all-pass filter responses. Some simulation and experimental test results are included to confirm the theory.

© 2017 Elsevier GmbH. All rights reserved.

1. Introduction

Analog filters are employed to reduce unwanted signals for instance electrical noise from electrical signals [1]. Analog filter circuits can be realized in different types in integrated circuits (ICs) for example voltage-mode (VM), current-mode (CM), transadmittance-mode and transimpedance-mode filters. CM filters have several superiorities over VM filters, use of a smaller number of active elements, good linearity, wide bandwidth and great dynamic range [2]. We have focused only CM filters employing second-generation current conveyors (CCIIs) and second-generation current controlled current conveyors (CCCIIs) in this paper.

CCIIs were firstly introduced in 1970 by Sedra and Smith [3], and they are still preferred because of their functionality and convenience for analog filters [4]. There are some active building block (ABB) based CM filters reported in related open literature [5–43]. CM filters can be divided into two sub-categories, second-order filters [5–39] and high-order filter circuits [40–43].

Second-order CM filter configurations should have both low input and high output impedances for easy cascadability but this feature is not satisfied for the filters in [5,6,8–15,17,18,20–22,27,29–38]. The filters in [5,7,14–19,21,22,26,28–32,36–38] suffer from lack of electronic tunability. Some CM filter topologies [5–7,12–15,18–20,22–25,31,32,34–38] do not offer orthogonal control of angular resonance frequency (ω_0) and quality factor (Q). Some CM filter configurations [16–26,28–34,39] cannot be easily constructed by commercially available active devices. Some CM filters [5–7,12,13,35,37,38] use floating capacitors. Several CM filters [10,17,36] are not universal. Some filter circuits in [9,18–21,29–31,36–38] have multi input currents; thus, extra circuitry requires to provide multi input currents.

Second-order CM filter configurations employing ABB such as CCII [5,7,15–19,21,22,32], inverting CCII (ICCII) [26,29], current differencing buffered amplifier (CDBA) [27], unity gain cell [14,28], differential voltage current conveyor (DVCC) [30,31], CCCII [6,8–13,20,23–25,33–35], current feedback operational amplifier (CFOA) [36–38] current follower transconductance amplifier (CFTA) [39], etc. have been found in related open literature.

A novel CM universal filter topology employing five plus-type CCIIs (CCII+s) with low and high output impedances yielding easy cascadability is proposed in this paper. The proposed filter circuit is made up of only grounded capacitors; consequently, it is convenient for IC process. It can simultaneously realize band-pass (BP), low-pass (LP) and high-pass (HP) responses in addition to all-pass filter (APF) and notch filter (NF) responses with appropriate selection of output currents. If all the three resistors are removed and CCCII+s are replaced instead of all the five CCII+s, the proposed

* Corresponding author.
E-mail addresses: fyucel@akdeniz.edu.tr (F. Yucel), erkanyuce@yahoo.com (E. Yuce).

http://dx.doi.org/10.1016/j.aeue.2017.05.041
1434-8411/© 2017 Elsevier GmbH. All rights reserved.

filter structure can be electronically tuned. Also, orthogonal control of ω_o and Q can be achieved for the proposed filter. However, APF and NF responses require a single passive component matching constraint. Some simulation results based on SPICE program and experimental test results are given in order to verify the theory.

This paper is organized as in the following sections: Introduction is given in Section 1 before the CCII+ is treated in Section 2. In Section 3, the proposed filter is given. The effects of CCII+ parasitic impedance effects on the filter performance are investigated in Section 4. After simulations are demonstrated in Section 5, experimental test results are given in Section 6. This paper is concluded in the last section, Section 7.

2. Circuit description

CCII+s are used in the proposed circuit. The CCII+ is an active element with three terminals which are X, Y and Z+. The CCII+ is defined by the following matrix equation:

$$\begin{bmatrix} I_y \\ V_x \\ I_{z+} \end{bmatrix} = \begin{bmatrix} 0 & 0 \\ \beta & 0 \\ 0 & \alpha \end{bmatrix} \begin{bmatrix} V_y \\ I_x \end{bmatrix} \tag{1}$$

Here, α is a non-ideal current gain and β is a non-ideal voltage gain, which are frequency dependent. Also, they are ideally equal to unity. α and β can be shown by $\alpha = 1 - \varepsilon_\alpha$ ($|\varepsilon_\alpha| << 1$) and $\beta = 1 - \varepsilon_\beta$ ($|\varepsilon_\beta| << 1$) at sufficiently low frequencies. Further, ε_α and ε_β which are tracking errors of related gains are ideally equal to zero. Internal structure of the CCII+ containing only sixteen MOS transistors [44] is depicted in Fig. 1. Symbol of the CCII+ is demonstrated in Fig. 2.

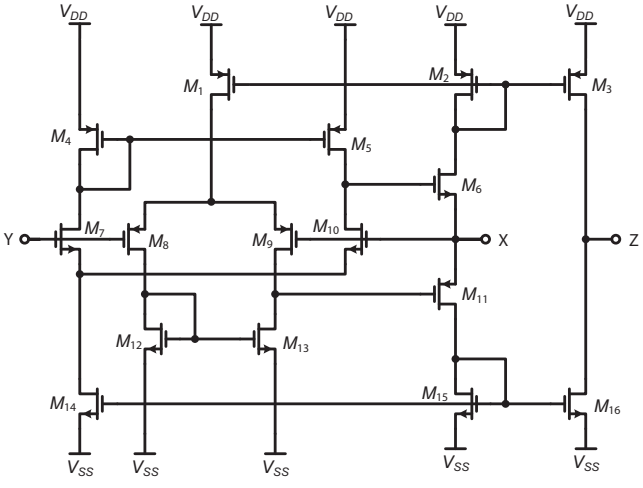

Fig. 1. MOS transistor based CCII+ [44]

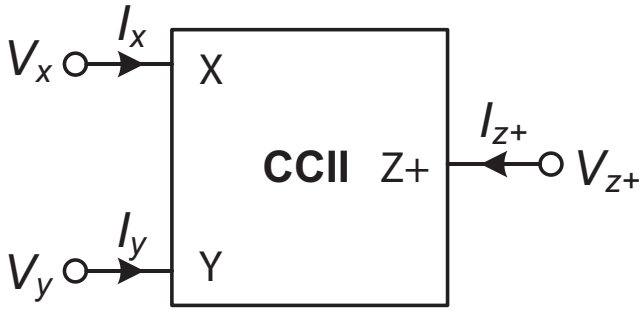

Fig. 2. Symbol of the CCII+.

3. The proposed universal filter

The proposed CM universal filter topology with one input and three outputs employs five CCII+s, three grounded capacitors and three resistors as shown in Fig. 3. The proposed circuit can simultaneously provide non-inverting BP, inverting LP and HP responses. It can further realize inverting APF and NF responses with relevant selection of output currents. Also, it can be easily realized by five CCCII+s [45] as shown in Fig. 4 for tunability. X terminal intrinsic resistor of the CCCII+ of the proposed filter in Fig. 4 is evaluated by [45]

$$R_X = \frac{V_T}{2I_{oi}} \tag{2}$$

where I_{oi} is a bias current of the ith CCCII+ and V_T is the thermal voltage approximately equal to 26 mV at room temperature. It is important to note that I_{o1} and I_{o5} must be chosen sufficiently large to prevent X terminal intrinsic resistor effects. On the other hand, similar filters of [8,10,11,15] and the proposed filter use five CCIIs/CCCIIs with single Z terminal and three grounded capacitors. However, the filters of [8,10,11,15] do not have the feature of low input impedance. The filter of [8] uses a minus-type CCCII and the filter of [10] is not universal. Also, the filter of [15] does not offer orthogonal control of ω_o and Q. Ideally, transfer functions (TFs) of LP, BP and HP responses of the proposed filter in Fig. 3 are given as follows:

$$\frac{I_{LP}}{I_{in}} = -\frac{1}{D(s)} \tag{3a}$$

$$\frac{I_{HP}}{I_{in}} = -\frac{C_2C_3R_1R_2s^2}{D(s)} \tag{3b}$$

$$\frac{I_{BP}}{I_{in}} = \frac{\frac{C_2R_1R_2}{R_3}s}{D(s)} \tag{3c}$$

where $D(s)$ is the characteristic equation of the filter in Fig. 3, which is computed as below

$$D(s) = C_1C_2R_1R_2s^2 + \frac{C_2R_1R_2}{R_3}s + 1 \tag{4}$$

For $C_3 = C_1$, TFs of inverting APF and NF TFs can be respectively obtained as

$$\frac{I_{AP}}{I_{in}} = \frac{I_{LP} + I_{HP} + I_{BP}}{I_{in}} = -\frac{C_1C_2R_1R_2s^2 - \frac{C_2R_1R_2}{R_3}s + 1}{D(s)} \tag{5a}$$

$$\frac{I_{NF}}{I_{in}} = \frac{I_{LP} + I_{HP}}{I_{in}} = -\frac{C_1C_2R_1R_2s^2 + 1}{D(s)} \tag{5b}$$

Then, phase response of the APF TF is calculated by

$$\phi(\omega) = \pi - 2\tan^{-1}\left(\frac{\omega C_2R_1R_2}{R_3 - \omega^2C_1C_2R_1R_2R_3}\right) \tag{6}$$

Here, as the frequency changes from zero to infinity, the phase changes from 180° to −180°. ω_o and Q of the proposed filter configuration are respectively given by

$$\omega_o = \frac{1}{\sqrt{C_1C_2R_1R_2}} \tag{7a}$$

$$Q = R_3\sqrt{\frac{C_1}{C_2R_1R_2}} \tag{7b}$$

It is observed from (7b) that the value of Q can be controlled orthogonally via R_3 without disturbing ω_o. Passive element sensitivities can be calculated as

$$S_{C_1}^{\omega_o} = S_{C_2}^{\omega_o} = S_{R_1}^{\omega_o} = S_{R_2}^{\omega_o} = -\frac{1}{2}$$

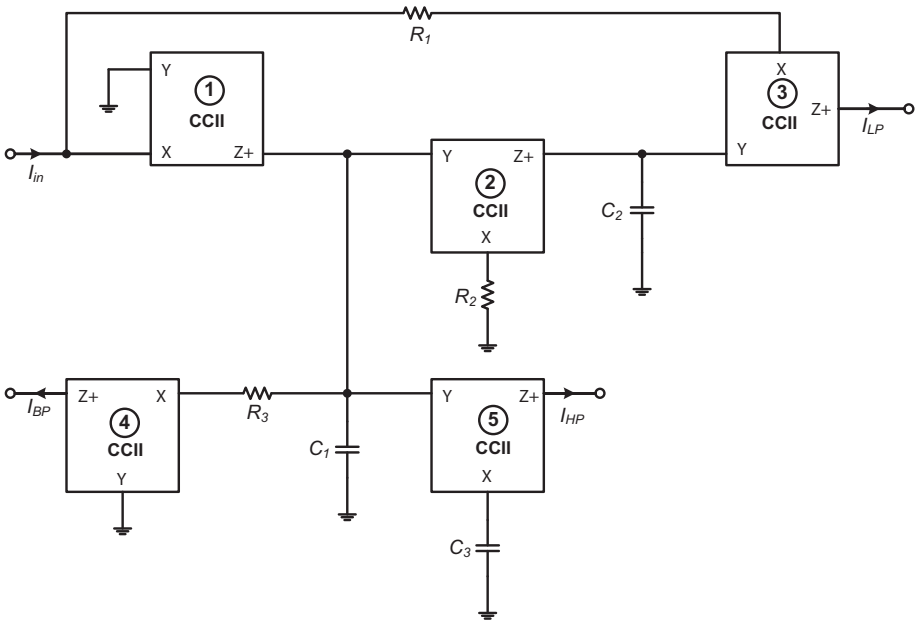

Fig. 3. The proposed filter configuration including CCII+s.

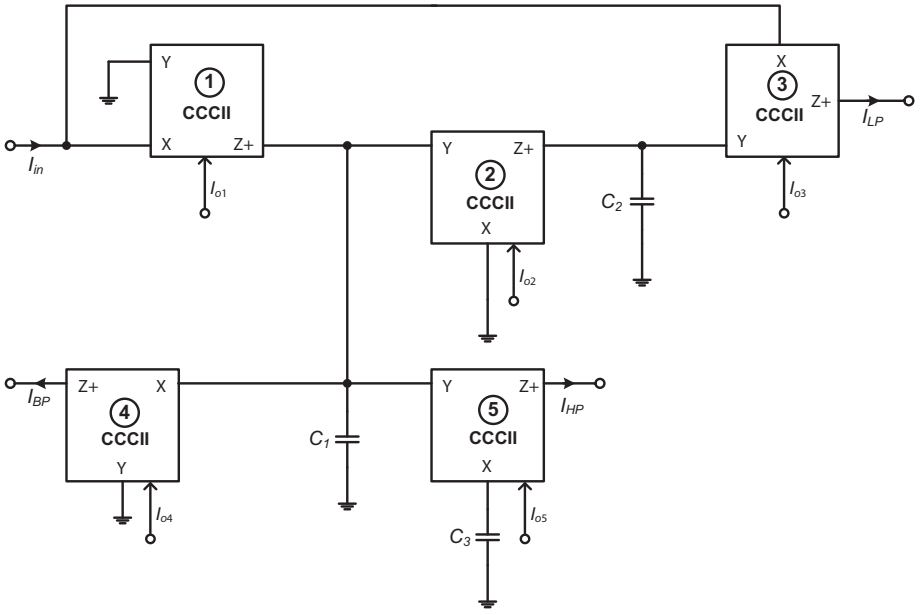

Fig. 4. The proposed filter configuration using CCCII+s.

$$S_{C_1}^{Q} = -S_{C_2}^{Q} = -S_{R_1}^{Q} = -S_{R_2}^{Q} = \frac{1}{2}$$

$$S_{R_3}^{Q} = 1$$

Here, all of the passive sensitivities are no more than unity in magnitude. Including non-ideal gains, the following TFs for LP, HP and BP currents can be respectively found as

$$\frac{I_{LP}}{I_{in}} = -\frac{\alpha_1\alpha_2\alpha_3\beta_2\beta_3}{D'(s)} \tag{8a}$$

$$\frac{I_{HP}}{I_{in}} = -\frac{\alpha_1\alpha_5\beta_5 C_2 C_3 R_1 R_2 s^2}{D'(s)} \tag{8b}$$

$$\frac{I_{BP}}{I_{in}} = \frac{\frac{\alpha_1\alpha_4 C_2 R_1 R_2}{R_3} s}{D'(s)} \tag{8c}$$

Here, the characteristic equation of the TFs is

$$D'(s) = C_1 C_2 R_1 R_2 s^2 + \frac{C_2 R_1 R_2}{R_3} s + \alpha_1\alpha_2\beta_2\beta_3 \tag{9}$$

For $C_3 = C_1$, TFs of APF and NF responses with non-ideal gains can be respectively written by

$$\frac{I_{AP}}{I_{in}} = \frac{I_{LP} + I_{HP} + I_{BP}}{I_{in}} = -\frac{\alpha_1\alpha_5\beta_5 C_1 C_2 R_1 R_2 s^2 - \frac{\alpha_1\alpha_4 C_2 R_1 R_2}{R_3} s + \alpha_1\alpha_2\alpha_3\beta_2\beta_3}{D'(s)} \tag{10a}$$

$$\frac{I_{NF}}{I_{in}} = \frac{I_{LP} + I_{HP}}{I_{in}} = -\frac{\alpha_1\alpha_5\beta_5 C_1 C_2 R_1 R_2 s^2 + \alpha_1\alpha_2\alpha_3\beta_2\beta_3}{D'(s)} \tag{10b}$$

The phase response of the proposed APF can be calculated by

$$\phi(\omega) = \pi - \tan^{-1}\left(\frac{\omega\alpha_1\alpha_4 C_2 R_1 R_2}{\alpha_1\alpha_2\alpha_3\beta_2\beta_3 R_3 - \omega^2\alpha_1\alpha_5\beta_5 C_1 C_2 R_1 R_2 R_3}\right) - \tan^{-1}\left(\frac{\omega C_2 R_1 R_2}{\alpha_1\alpha_2\beta_2\beta_3 R_3 - \omega^2 C_1 C_2 R_1 R_2 R_3}\right) \quad (11)$$

4. Parasitic impedance effects

A CCII+ with its parasitic impedances is demonstrated in Fig. 5. It is assumed that R_{X1} is sufficiently small; thus, its effects can be neglected. Also, all the three output currents are connected to ground; accordingly, the effects of R_{Z3}, C_{Z3}, R_{Z4}, C_{Z4}, R_{Z5} and C_{Z5} at outputs of the proposed universal filter are negligible. If the above assumptions are considered, the following TFs are respectively obtained for LP, HP and BP responses:

$$\frac{I_{LP}}{I_{in}} = -\frac{1}{D_p(s)} \quad (12a)$$

$$\frac{I_{HP}}{I_{in}} = -\frac{R_1 R_2 s C_3\left(s(C_2 + C_{Z2} + C_{Y3}) + \frac{1}{R_{Z2}}\right)}{(1 + sC_3 R_{X5}) D_P(s)} \quad (12b)$$

$$\frac{I_{BP}}{I_{in}} = \frac{\frac{R_1 R_2}{R_3 + R_{X4}}\left(s(C_2 + C_{Z2} + C_{Y3}) + \frac{1}{R_{Z2}}\right)}{D_P(s)} \quad (12c)$$

Here, the characteristic equation with parasitic impedances can be written as:

$$D_P(s) = \left(s(C_1 + C_{Z1} + C_{Y2} + C_{Y5}) + \frac{1}{R_{Z1}}\right)\left(s(C_2 + C_{Z2} + C_{Y3}) + \frac{1}{R_{Z2}}\right) + \left(s(C_2 + C_{Z2} + C_{Y3}) + \frac{1}{R_{Z2}}\right)\frac{R_1 R_2}{R_3} + 1 \quad (13)$$

The following restrictions should be satisfied simultaneously for proper operation [11]:

$$\omega(C_2 + C_{Z2} + C_{Y3}) >> \frac{1}{R_{Z2}} \quad (14a)$$

$$\omega C_3 R_{X5} << 1 \quad (14b)$$

From (14), the following useful frequency range is obtained:

$$\frac{10}{2\pi(C_2 + C_{Z2} + C_{Y3})R_{Z2}} \leqslant f \leqslant \frac{0.1}{2\pi C_3 R_{X5}} \quad (15)$$

It is seen from (15) that for good high frequency performance, values of R_{X5} and C_3 should be chosen as small as possible. Also, value of R_{Z2} should be chosen as large as possible for good low frequency performance.

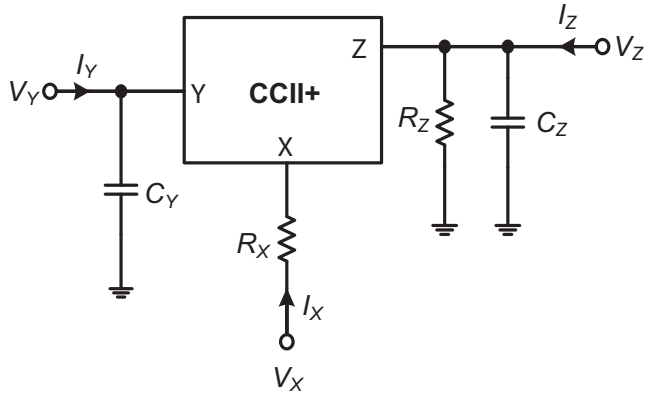

Fig. 5. CCII+ with parasitic impedances.

5. Simulation results

Simulations of the proposed filter are performed by SPICE program in which 0.13 μm IBM CMOS technology parameters are used. R_X = 348 mΩ, R_Z = 13.73 kΩ, C_Z = 12.9 fF and C_Y = 3.18 fF for the CCII

Table 1
Dimensions of the MOS transistors of the CCII+ in Fig. 1.

Transistor Name	W/L
M_1, M_2, M_3, M_8, M_9	39 μm/0.52 μm
M_7, M_{10}, M_{14}, M_{15}, M_{16}	13 μm/0.52 μm
M_4, M_5	65 μm/0.52 μm
M_{12}, M_{13}	19.5 μm/0.52 μm
M_6	52 μm/0.52 μm
M_{11}	156 μm/0.52 μm

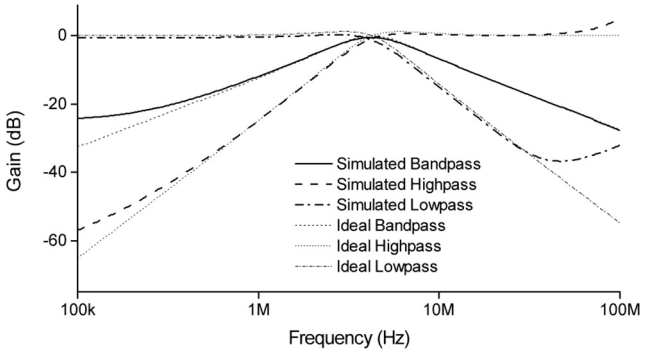

Fig. 6. Low-pass, band-pass and high-pass gain responses of the proposed universal filter.

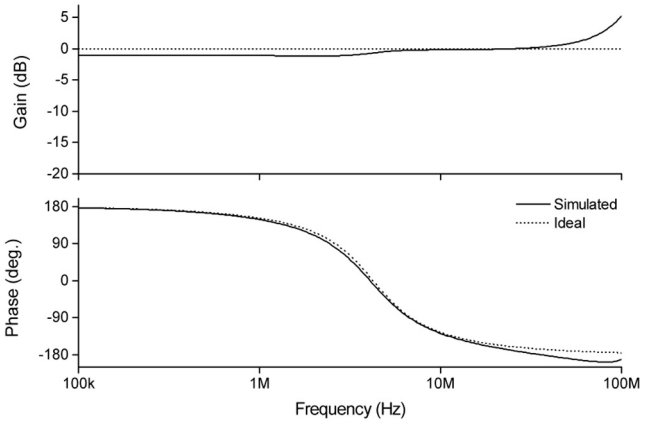

Fig. 7. All-pass filter gain and phase responses.

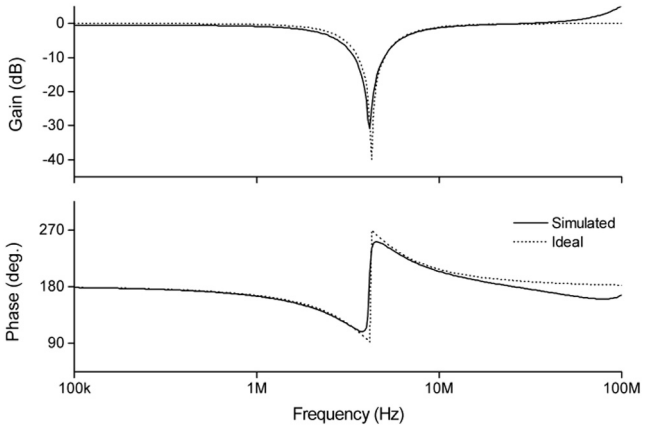

Fig. 8. Notch filter gain and phase responses.

+ in Fig. 1 are found in SPICE simulations. Also, thanks to self-biasing, any additional bias voltages or currents except DC power supply voltages are not used in the proposed filter based on the CCII+ given in Fig. 1. Dimensions of the MOS transistors of the CCII+ in Fig. 1 are given in Table 1. The DC power supply voltages are chosen as ± 0.75 V. As an example, passive elements of the proposed filter given in Fig. 3 are chosen as $R_1 = R_2 = R_3 = 750\ \Omega$ and $C_1 = C_2 = C_3 = 50$ pF resulting in $f_o = 4.24$ MHz and $Q = 1$.

Gain responses of the proposed filter in Fig. 3 are depicted in Fig. 6. APF gain and phase responses of the proposed filter in Fig. 3 are depicted in Fig. 7. Additionally, the NF gain and phase responses of the proposed circuit in Fig. 3 are shown in Fig. 8. Input and related output noises of the proposed BP filter are given in Fig. 9 where a load resistor of 1 kΩ is connected to output. A Monte Carlo (MC) analysis with twenty runs is accomplished to demonstrate changes for APF currents where 10% uniform distribution variations for the values of C_1, C_2 and C_3 are used. Thus, gain and phase responses are given in Fig. 10. Similarly, with twenty runs, a MC analysis for 10% uniform distribution variations of the values

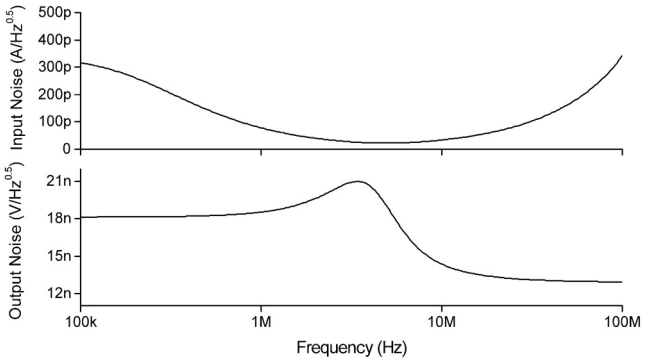

Fig. 9. Input and related output noises versus frequency.

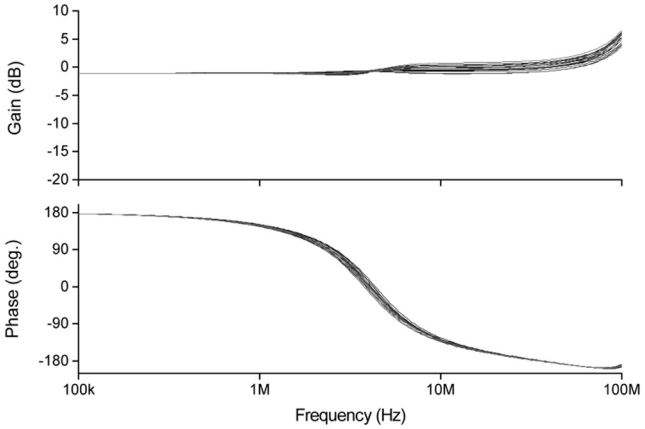

Fig. 10. All-pass filter responses for 10% variations of C_1, C_2 and C_3 values with Monte Carlo analysis.

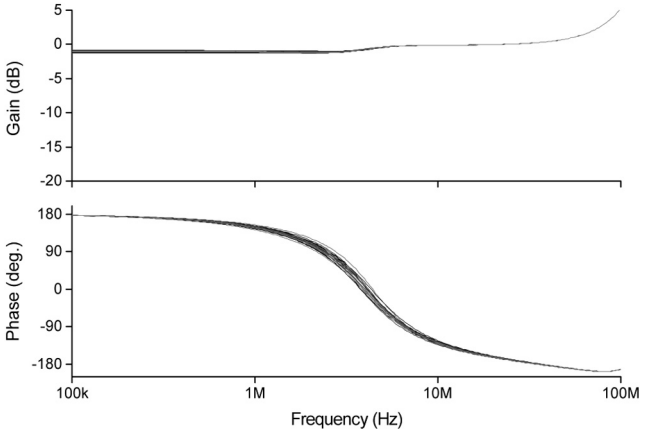

Fig. 11. All-pass filter responses for 10% variations of R_1, R_2 and R_3 values with Monte Carlo analysis.

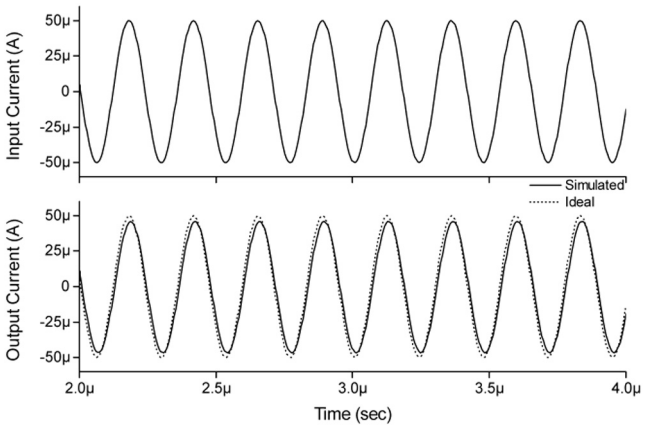

Fig. 12. All-pass filter output for a sinusoidal input current.

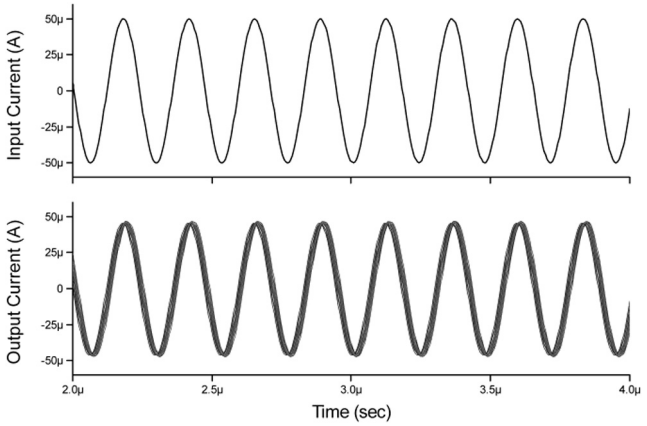

Fig. 13. All-pass filter sinusoidal input and corresponding output responses for 10% variations of C_1, C_2 and C_3 values with Monte Carlo analysis.

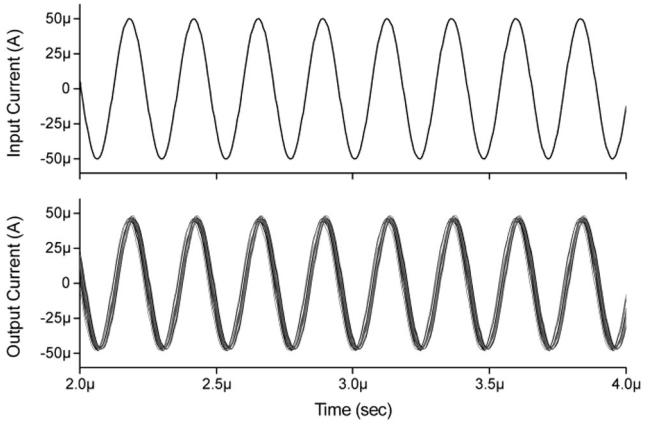

Fig. 14. All-pass filter sinusoidal input and corresponding output responses for 10% variations of R_1, R_2 and R_3 values with Monte Carlo analysis.

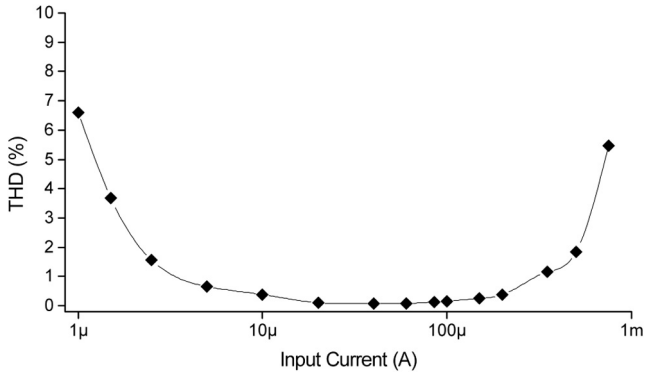

Fig. 15. THD variations of the proposed band-pass filter circuit with respect to applied peak sinusoidal input signals at 4.24 MHz.

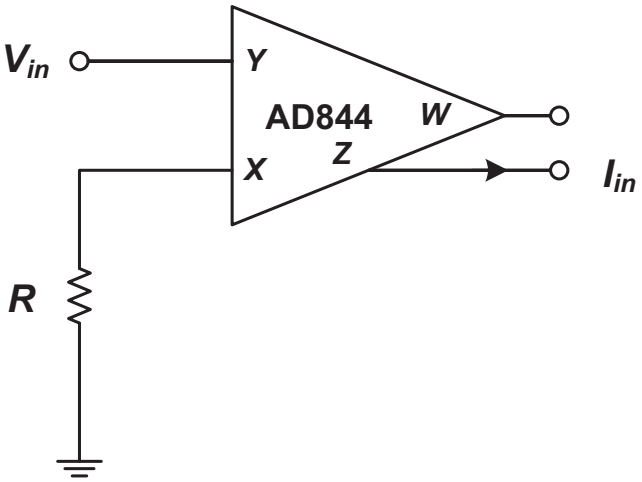

Fig. 16. An input current signal generator.

of R_1, R_2 and R_3 is performed to show changes. Therefore, gain and phase responses for MC analysis are shown in Fig. 11.

At the resonance frequency of 4.24 MHz, a sinusoidal input current with 50 µA peak is applied to the proposed filter. The input and corresponding time domain APF output currents of the circuit

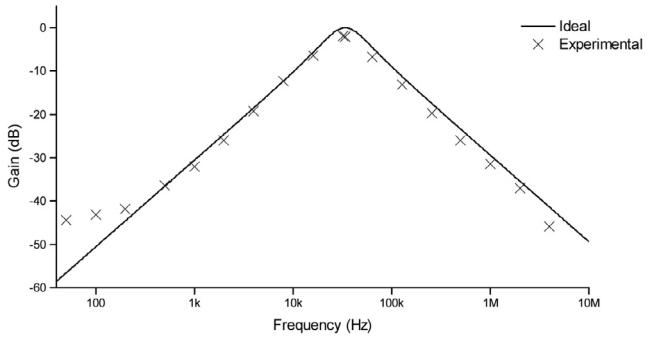

Fig. 18. Band-pass gain responses of the experimental test circuit versus frequency.

in Fig. 3 are depicted in Fig. 12. With twenty runs, a MC analysis for 10% uniform distribution variations of the values of C_1, C_2 and C_3 is achieved where a sinusoidal signal with a 50 µA peak at 4.24 MHz is applied. Input current and related ideal and simulated APF output currents are shown in Fig. 13. Similarly, with twenty runs, a MC analysis for 10% uniform distribution variations of the values of R_1, R_2 and R_3 is performed in which a sinusoidal signal with a 50 µA peak at 4.24 MHz is applied. Sinusoidal input and related output current responses are demonstrated in Fig. 14.

The total harmonic distortion (THD) variations with respect to peak value of the applied sinusoidal signal for the BP response at 4.24 MHz are depicted in Fig. 15 where a load resistor of 1 kΩ is connected to output. It is observed from Fig. 15 that the filter in Fig. 3 has a dynamic range which is approximately equal to 50 dB. Total power dissipation for the filter in Fig. 3 is found as 5.48 mW in SPICE simulations.

6. Experimental test results

In order to achieve an experimental test, the proposed filter circuit is set up by using five commercially available active devices such as AD844s [46]. Also, an input current signal generator in Fig. 16 employs only one AD844 and a resistor, $R = 1$ kΩ. Passive components of the experiment test circuit are chosen as $R_1 = R_2 = R_3 = 1$ kΩ and $C_1 = C_2 = C_3 = 4.7$ nF yielding $f_o = 33.86$ kHz and $Q = 1$. Also, symmetrical DC power supply voltages are chosen as ± 6V. The time domain input and related BP output responses of the proposed circuit are demonstrated in Fig. 17. Ideal and exper-

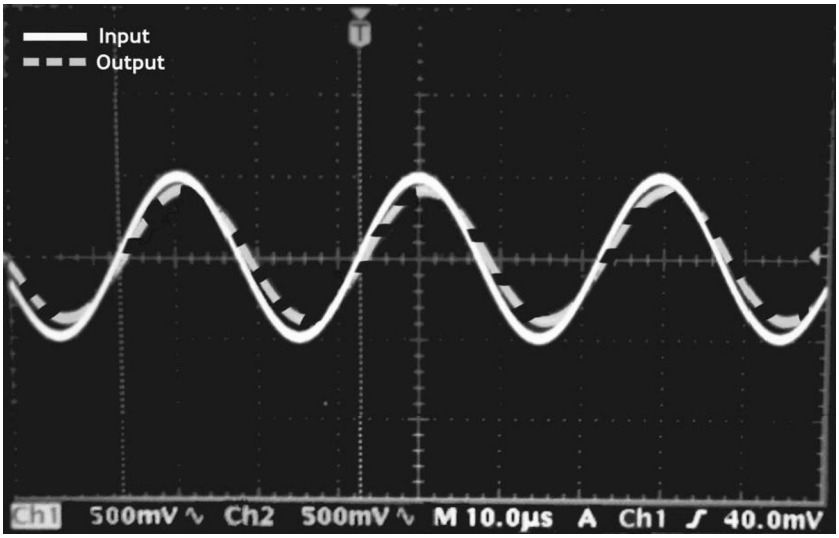

Fig. 17. Experimental time-domain band-pass input and output response of the proposed universal filter.

Table 2
A comparison of open literature ABB based current-mode filters [5–15] with single Z terminal and this work.

References	ABB Type	# of ABB(s)	# of Transistors used to employ an ABB	# of Resistor(s)		# of Capacitor(s)		Low Input/High Output Impedance	Tunability	Orthogonal control of ω_o and Q	Technology	Power Supplies
				Floating	Grounded	Floating	Grounded					
[5]	CCII±	4	–	2	0	2	0	No/Yes	No	No	–	±10 V
[6]	CCCII±	4	14[a]	0	0	2	0	No/Yes	Yes	No	NR100N, PR100N	±2.5 V
[7]	CCII+2. circuit	4	–[b]	2	0	2	0	Yes/Yes	No	No	AD844	±12 V
[8]	CCCII±	5	13[a]	0	0	0	3	No/Yes	Yes	Yes	PR100N, NR100N	±2.5 V
[9]	CCCII+	5	13[a]	0	0	0	2	No/Yes	Yes	Yes	PR100N, NR100N	±3 V
[10]	CCCII+	5	13[a]	0	0	0	3	No/Yes	Yes	Yes	PR100N, NR100N	±2.5 V
[11]	CCCII± or CCCII+	4[c] or 5	20[d]	0	0	0	2 or 3	No/Yes	Yes	Yes	PR100N, NR100N	±2.5 V
[12]	CCCII±	2 or 3[e]	20[d]	0	0	0 or 1	1 or 2	No/Yes	Yes	No	PR100N, NR100N	±2.5 V
[13]	CCCII+	4	14[a]	0	0	2	0	No/Yes	Yes	No	NR100N, PR100N	±2.5 V
[14]	CF+ and VF 1. circuit	1 and 2	10	2	2	0	2	No/No	No	No	0.25 μm	±1.25 V
[15]	CCII+	5	10	2	1	0	3	No/Yes	No	No	0.25 μm	±1.25 V
This work	CCII+ or CCCII+	5	16	2 or 0	1 or 0	0	3	Yes/Yes	Yes	Yes	0.13 μm	±0.75 V

– not available [a] used BJTs [b] used commercially available ICs (AD844) [c] One of active blocks is dual-output CCCII.
[d]BJT number for dual-output CCCII [e] Only plus-type CCCIIs are used.
CF: Current Follower, VF: Voltage Follower.

imental test results of the proposed filter circuit with respect to frequency are given in Fig. 18.

It is observed from simulation results given in Figs. 6–15 and experimental test results in Figs. 17 and 18 that experimental test, simulation, and ideal results are close to themselves but a bit discrepancy among them can be attributed to non-idealities of the active devices. Also, parasitic capacitors and resistors of the board affect the performance of the proposed filter. This work is compared with open literature ABB based CM filter circuits [5–15] with single Z terminal given in Table 2.

7. Conclusion

A novel filter configuration with single input and three outputs simultaneously realizing LP, BP and HP is proposed in this paper. The proposed universal filter can provide APF and NF responses with appropriate selection of output currents. It consists of only five CCII+s/CCCII+s with low input and high output impedances resulting in easy cascadability with other CM circuits. It is composed of only grounded capacitors; consequently, it is suitable for IC technology. It offers orthogonal control of ω_o and Q, and can be tuned electronically. Further, it does not need any additional passive and active components to provide universal filter responses. Nonetheless, it requires a single passive component matching condition for only APF and NF responses. It is expected that the proposed universal filter will be beneficial in a number of areas such as in communications, signal processing, control engineering, etc.

Acknowledgements

The circuits of this paper were derived from the PhD thesis given in [47].

References

[1] Dorf RC, Svoboda JA. Introduction to electric circuits. 8th Edition. Asia: John Wiley & Sons Inc; 2011.
[2] Ferri G, Guerrini NC. Low voltage, low power CMOS current conveyors. Springer; 2003.
[3] Sedra AS, Smith KC. A second-generation current conveyor and its applications. IEEE Trans Cir Theory 1970;17:132–4.
[4] Wilson B. Recent developments in current conveyors and current-mode circuits. IEE Proc G Circ Dev Syst 1990;137:63–77.
[5] Özoguz S, Acar C. Universal current-mode filter with reduced number of active and passive components. Electron Lett 1997;33(11):948–9.
[6] Yuce E, Minaei S, Cicekoglu O. Universal current-mode active-C filter employing minimum number of passive elements. Analog Integr Circ Sig Process 2006;46:169–71.
[7] Özoğuz S, Toker A, Çiçekoğlu O. New current-mode universal filters using only four (CCII+)s. Microelectron J 1999;30:255–8.
[8] Minaei S, Türköz S. New current-mode current-controlled universal filter with single input and three outputs. Int J Electron 2001;88(3):333–7.
[9] Tangsrirat W, Surakampontorn W. Electronically tunable current-mode universal filter employing only plus-type current-controlled conveyors and grounded capacitors. Circ Syst Signal Proces 2006;25(6):701–13.
[10] Minaei S, Türköz S. Current-mode electronically tunable universal filter using only plus-type current controlled conveyors and grounded capacitors. ETRI J 2004;26(4):292–6.
[11] Yuce E, Minaei S. Universal current-mode filters and parasitic impedance effects on the filter performances. Int J Circuit Theory Appl 2008;36:161–71.
[12] Yuce E, Kircay A, Tokat S. Universal resistorless current-mode filters employing CCCIIs. Int J Circuit Theory Appl 2008;36:739–55.
[13] Minaei S, Yuce E. Universal current-mode active-C filters employing only plus-type current controlled conveyors. Frequenz 2006;60(7–8):134–7.
[14] Alpaslan H, Yuce E. Current-mode biquadratic universal filter design with two terminal unity gain cells. Radioengineering 2012;21(1):304–11.
[15] Yuce E, Minaei S. Signal limitations of the current-mode filters employing current conveyors. Int J Electron Commun (AEÜ) 2008;62:193–8.
[16] Soliman AM. Current mode universal filter. Electron Lett 1995;31(17):1420–1.
[17] Elwan HO, Soliman AM. A novel CMOS current conveyor realization with an electronically tunable current mode filter suitable for VLSI. IEEE Trans Circuits Syst II Anal Digital Signal Process 1996;43(9):663–70.
[18] Güneş EO, Toker A, Özoğuz S. Insensitive current-mode universal filter with minimum components using dual-output current conveyors. Electron Lett 1999;35(7):524–5.
[19] Wang HY, Lee CT. Versatile insensitive current-mode universal biquad implementation using current conveyors. IEEE Trans Circuits Syst II Analog Digital Signal Process 2001;48(4):409–13.
[20] Tangsrirat W, Surakampontorn W. High output impedance current-mode universal filter employing dual-output current-controlled conveyors and grounded capacitors. Internal J Electron Commun 2007;61:127–31.
[21] Chen HP. Versatile current-mode universal biquadratic filter using DO-CCIIs. Int J Electron 2013;100(7):1010–31.
[22] Horng JW, Hou CL, Chang CM, Shie JY, Chang CH. Universal current filter with single input and three outputs using MOCCIIs. Internal J Electron 2007;94(4):327–33.

[23] Pandey N, Paul SK, Bhattacharyya A, Jain SB. A novel current controlled current mode universal filter: SITO approach. IEICE Electron Expr 2005;2(17):451–7.
[24] Pandey N, Paul SK, Jain SB. A new electronically tunable current mode universal filter using MO-CCCII. Analog Integr Circ Sig Process 2009;58:171–8.
[25] Yuce E. Current-mode electronically tunable biquadratic filters consisting of only CCCIIs and grounded capacitors. Microelectron J 2009;40:1719–25.
[26] Soliman AM. Current mode filters using two output inverting CCII. Int J Circuit Theory Appl 2008;36:875–81.
[27] Özoğuz S, Toker A, Acar C. Current-mode continuous-time fully-integrated universal filter using CDBAs. Electron Lett 1999;35(2):97–8.
[28] Alzaher HA, Ismail M. Current-mode universal filter using unity gain cells. Electron Lett 1999;35(25):2198–200.
[29] Chen HP. Current-mode dual-output ICCII-based tunable universal biquadratic filter with low-input and high-output impedances. Int J Circuit Theory Appl 2014;42(4):376–93.
[30] Chen HP. Tunable versatile current-mode universal filter based on plus-type DVCCs. Int J Electron Commun 2012;66:332–9.
[31] Tsukutani T, Sumi Y, Yabuki N. Novel current-mode biquadratic circuit using only plus type DO-DVCCs and grounded passive components. Int J Electron 2007;94(12):1137–46.
[32] Keskin AÜ, Cam U. Insensitive high-output impedance minimum configuration SITO-type current-mode biquad using dual-output current conveyors and grounded passive components. Int J Electron Commun (AEÜ) 2007;61:341–4.
[33] Wang C, Liu H, Zhao Y. A new current-controlled universal filter based on CCCII (±). Circuits Syst Signal Process 2008;27:673–82.
[34] Wang C, Xu J, Keskin AÜ, Du S, Zhang Q. A new current-mode current-controlled SIMO-type universal filter. Int J Electron Commun (AEÜ) 2011;65:231–4.
[35] Minaei S, Yuce E. Current-mode active-C filter employing reduced number of CCCII+s. J Circuits Syst Comput 2007;16(4):507–16.
[36] Sharma RK, Senani R. Multifunction CM/VM biquads realized with a single CFOA and grounded capacitors. Int J Electron Commun (AEÜ) 2003;57 (5):301–8.
[37] Sharma RK, Senani R. Universal current mode biquad using a single CFOA. Int J Electron 2004;91(3):175–83.
[38] Sharma RK, Senani R. On the realization of universal current mode biquads using a single CFOA. Analog Integr Circ Sig Process 2004;41:65–78.
[39] Tangsrirat W. Single-input three-output electronically tunable universal current-mode filter using current follower transconductance amplifiers. Int J Electron Commun (AEÜ) 2011;65:783–7.
[40] Yuce E, Minaei S. Realization of arbitrary current transfer functions based on commercially available CCII+s. Int J Circuit Theory Appl 2014;42(7):659–70.
[41] Alzaher H, Tasadduq N, Al-Ees O. Implementation of reconfigurable n^{th}-order filter based on CCII. Analog Integr Circ Sig Process 2013;75:539–45.
[42] Yuce E, Minaei S. On the realization of high-order current-mode filter employing current controlled conveyors. Comput Electr Eng 2008;34:165–72.
[43] Yuce E, Minaei S. ICCII-based universal current-mode analog filter employing only grounded passive components. Analog Integr Circ Sig Process 2009;58 (2):161–9.
[44] E. Arslan, A. Morgul, Wideband self-biased CMOS CCII, Research in Microelectronics and Electronics, 2008. PRIME 2008. Ph.D., Istanbul, 2008, pp. 217-220. doi: 10.1109/RME.2008.4595764.
[45] A. Fabre, O. Saaid, F. Wiest, C. Boucheron, High frequency applications based on a new current controlled conveyor, IEEE Transactions on Circuits and Systems−I: Fundamental Theory and Applications, vol. 43, pp. 82–91, 1996.
[46] AD844 60MHz monolithic Op amp http://www.analog.com/media/en/technical-documentation/data-sheets/AD844.pdf.
[47] Yucel F. MOS transistor based electronically tunable analog circuits PhD thesis. Pamukkale University; 2015.



Firat Yucel was born in 1982 in Kutahya, Turkey. He received the B.Sc. and M.Sc. degrees from Suleyman Demirel University (Isparta, Turkey) at Electronics and Computer Education and the PhD. degree from Pamukkale University (Denizli, Turkey) at Electrical and Electronics Engineering in 2005, 2008 and 2015, respectively. He is currently an Assistant Professor at the Informatics Department of Akdeniz University in Antalya, Turkey. His current research interests include MOS transistor based analog circuits and computer-aided automation systems. He has served as a reviewer for some international journals and a number of scientific projects. He is the author or co-author of about 20 papers published in scientific journals or conference proceedings.



Erkan Yuce was born in 1969 in Nigde, Turkey. He received the B.Sc. degree from Middle East Technical University, the M.Sc. degree from Pamukkale University and the PhD. degree from Bogazici University all in Electrical and Electronics Engineering in 1994, 1998 and 2006, respectively. He is currently a Professor at the Electrical and Electronics Engineering Department of Pamukkale University. His current research interests include analog circuits, active filters, synthetic inductors and MOS transistor based circuits. He is the author or co-author of about 150 papers published in scientific journals or conference proceedings.